
32 M
FS026x7L

2-1 FS026x7L ..... 12
2-2 ..... 13
3-1 FS026S7L 64-Pin (7x7mm) LQFP ..... 25
3-2 FS026R7L 64-Pin (10x10mm) LQFP ..... 26
3-3 FS026C7L 48-Pin (7x7mm) LQFP ..... 27
3-4 FS026C7N 48-Pin (5x5mm) QFN ..... 28
4-1 ..... 41
5-1 ..... 42
5-2 ..... 43
5-3 ..... 52
5-4 ..... 53
5-5 $I_{OL}$, $V_{OL}$, @$V_{DDH}$=2.5V, 3.3V, 5V, DS=0 ..... 59
5-6 $I_{OH}$, $V_{OH}$, @$V_{DDH}$=2.5V, 3.3V, 5V, DS=0 ..... 59
5-7 $I_{OL}$, $V_{OL}$, @$V_{DDH}$=2.5V, 3.3V, 5V, DS=1 ..... 60
5-8 $I_{OH}$, $V_{OH}$, @$V_{DDH}$=2.5V, 3.3V, 5V, DS=1 ..... 60
5-9 NRST ..... 61
5-10 I2C ..... 62
5-11 SPI - CPHA = 0 ..... 64
5-12 SPI - CPHA = 1 ..... 64
6-1 LQFP48(7x7mm) ..... 69
6-2 LQFP64(7x7mm) ..... 70
6-3 LQFP64(10x10mm) ..... 71
6-4 QFN 48(5x5mm) ..... 72

2-2 ..... 19
2-3 UART1~4 ..... 22
2-4 SPI ..... 23
3-1 ..... 34
3-2 ..... 36
3-3 PAxx ..... 37
3-4 PBxx ..... 38
3-5 PCxx ..... 39
3-6 PDxx ..... 40
5-1 ..... 44
5-2 ..... 44
5-3 ..... 44
5-4 ..... 45
5-5 ..... 45
5-6 ..... 46
5-7 Flash ..... 47
5-8 SRAM ..... 48
5-9 SLEEP ..... 49
5-10 STOP ..... 49
5-11 STANDBY0 ..... 49
5-12 STANDBY1 ..... 50
5-13 SHUTDOWN ..... 50
5-14 ..... 50
5-15 ..... 51
5-16 ..... 51
5-17 HOSC ..... 52
5-18 LOSC ..... 53
5-19 4M RC ..... 54
5-20 48M RC ..... 54
5-21 RC ..... 54
5-22 PLL ..... 55
5-23 FLASH ..... 55
5-24 EMS ..... 56
5-25 ..... 56
5-26 ..... 56
5-27 IO DC ..... 57
5-28 IO AC ..... 58
5-29 NRST ..... 61
5-30 ..... 61
5-31 I2C ..... 62
5-32 SPI ..... 63
5-33 USB FS ..... 65

# 1

FS026x7L

(FS026x7L )

Cortex-M0 Cortex-M0 ARM (http://infocenter.arm.com)

# 2

FS026x7L ARM Cortex™-M0 32 RISC
72MHz 128Kbytes Flash 16Kbytes SRAM
2 I2C 1 SPI
I2S 2 SPI 4 UART 1 16 1 32 7 16
1 16 1 12 ADC 2

FS026x7L USB 2.0 / USB
USB
USB 4 Mhz 48 Mhz RC
48Mhz USB

FS026x7L 1.8V ~ 5.5V -40°C ~ +85°C

FS026x7L

## 2. 1

| | FS026<br>FS026 | FS026S7L<br>FS026R7L |
|---|---|---|
| Flash (Kbytes) | 128 | 128 |
| SRAM(KBytes) | 16 | 16 |
| GPIO | Max: 38 | Max: 54 |
| 12-bit ADC | 1 (10 channels) | 1 (16 channels) |
| CMP | 2 | 2 |
| DMA | 6 channels | |
| CRC | 1 | |
| AES | 1 (128 bits) | |
| CALC | | |

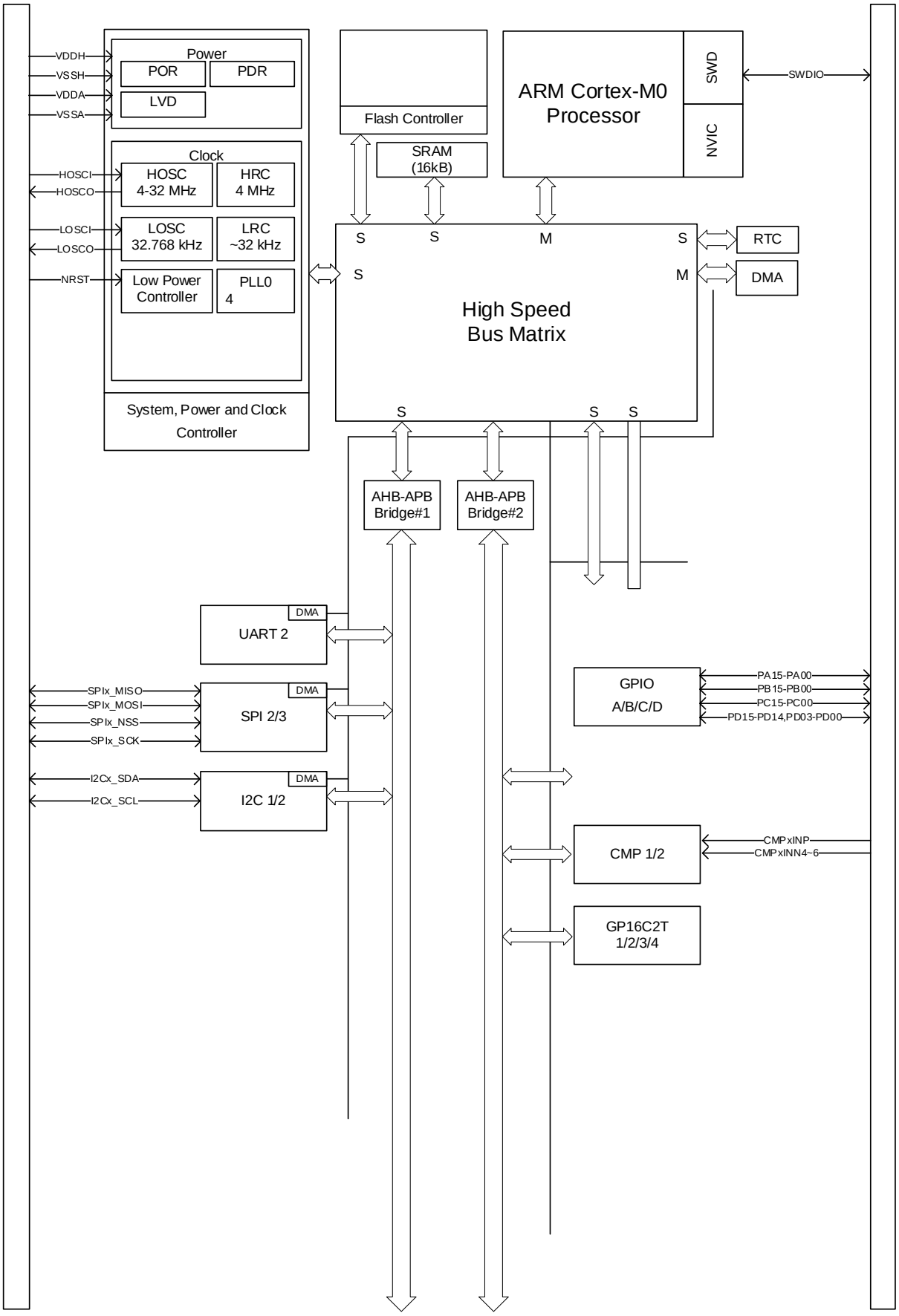
VDDH
VSSH
VDDA
VSSA
Power
POR
PDR
LVD
Clock
HOSCI
HOSCO
HOSC
4-32 MHz
HRC
4 MHz
LOSCI
LOSCO
LOSC
32.768 kHz
LRC
~32 kHz
NRST
Low Power
Controller
PLL0
4
System, Power and Clock
Controller
Flash Controller
SRAM
(16kB)
ARM Cortex-M0
Processor
SWD
NVIC
SWDIO
S
S
M
S
S
M
RTC
DMA
High Speed
Bus Matrix
S
S
S
AHB-APB
Bridge#1
AHB-APB
Bridge#2
DMA
UART 2
SPIx_MISO
SPIx_MOSI
SPIx_NSS
SPIx_SCK
DMA
SPI 2/3
I2Cx_SDA
I2Cx_SCL
DMA
I2C 1/2
GPIO
A/B/C/D
PA15-PA00
PB15-PB00
PC15-PC00
PD15-PD14,PD03-PD00
CMP 1/2
CMPxINP
CMPxINN4~6
GP16C2T
1/2/3/4

## 2. 2

### 2. 2. 1 M C

#### 2. 2. 1. 1 A -M0 RM C

- ◇ (NVIC) 32
- ◇
- ◇ - SysTick
- ◇
- ◇
- ◇ (SWD)

- ◇ CPU (SysTick)
- ◇ CPU (NVIC)
- ◇ CPU

#### 2. 2. 1. 2 NV I C

- ◇ 32
- ◇
- ◇
- ◇
- ◇

NVIC

#### 2. 2. 1. 3

- SysTick 24

(RTOS)

2. 2. 3. 6 (DM A )

DMA(Direct Memory Access)

6 DMA DMA DMA

DMA

2. 2. 3. 7 (P I S)

PIS(Peripheral Interaction System) PIS

CPU

2. 2. 3. 8

(IWDT)

IWDT(Independent Watchdog)

IWDT

LRC

(WWDT)

WWDT(Window Watchdog) PCLK

WWDT

## 2. 2. 6

FS026x7L 10 28 PWM



2. 2. 6. 2 32 4 ( 32G 1) P C

◇ 32 /

◇ 16 1 65536

◇

– 

– 

– PWM ( )

– 

◇

◇ DMA

◇ ( )

◇

◇

2. 2. 6. 3 16 4 ( G P16 )

◇ 16 /

◇ 16 1 65536

◇

– 

– 

– PWM ( )

– 

◇

◇ DMA

◇ ( )

◇

◇

2. 2. 6. 4 16 2 ( G n P16 )

◇ 16

◇ 16 1 65536

◇

– 

– 

– PWM

–

◇ 1

◇

◇

◇

◇ DMA

◇

2. 2. 6. 5 (BS16T1)

◇ 16

◇ 16 1 65536

◇

◇

2. 2. 6. 6 (RT C

Real Time Clock (RTC) BCD

RTC RTC

2 32.768 KHz 32 KHz

RC RTC

RTC

2. 2. 7 (KB C

RGB PWM

PWM RGB LED

24

15 32

## 2. 2. 8

### 2. 2. 8. 1 (U ) A RT

(UART) MCU NRZ

I2S I2S

(MCLK) I2S Philips MSB LSB

PCM

SPI

SPI1 SPI2 SPI3

| SPI / | SPI1 | SPI2 | SPI3 |
|---|---|---|---|
| Rx TxFIFO (N)[ x 8 ] | 16 | 4 | 4 |
| I2S | | | |

2-4 SPI

2. 2. 8. 4 ( C

# 3

## 3. 1 6

### 3. 1. 1 LQFP64 (7x7mm ) 4241414144

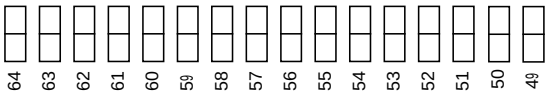

### 3. 1. 2 LQFP64 ( 10x10mm)

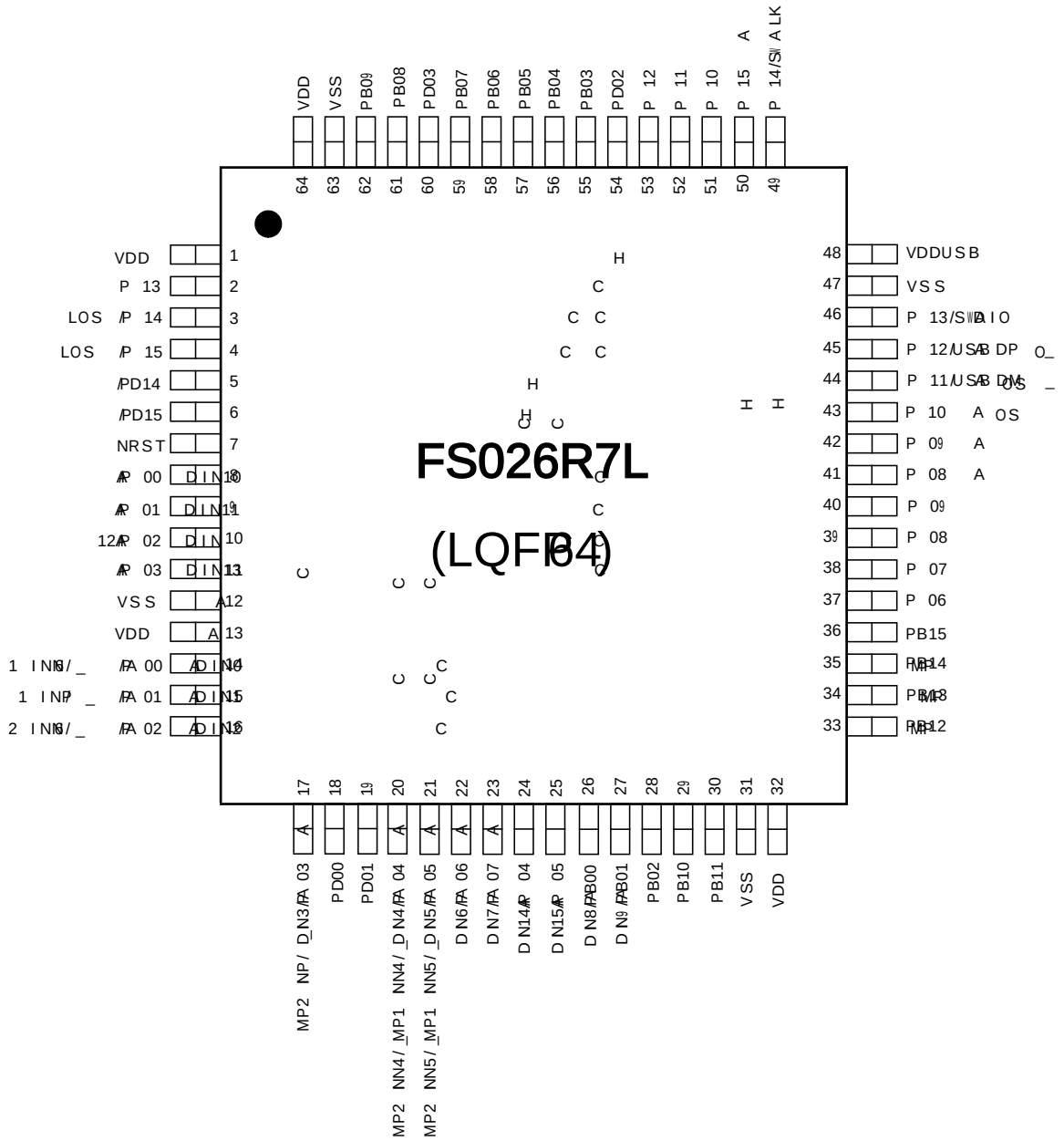


3-2 FS026R7L 64-Pin (10x10mm) LQFP

### 3. 1. 3 LQFP48 (7x7mm)

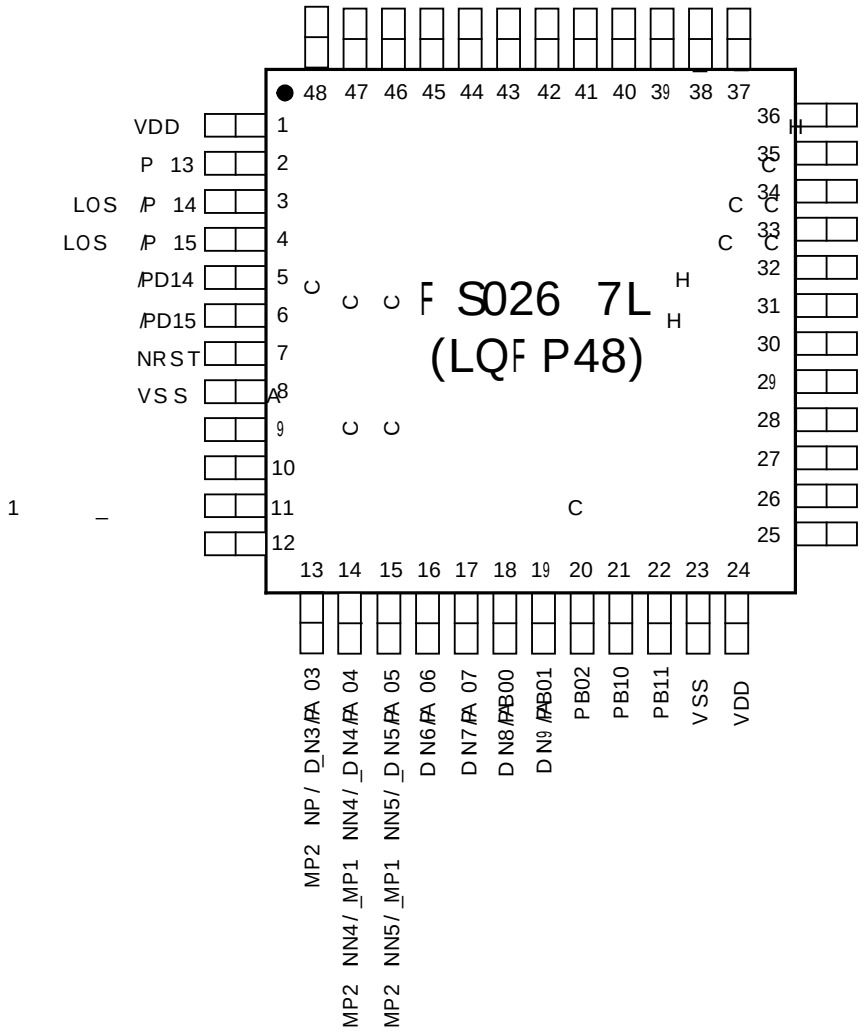

### 3. 1. 4 QFN48(5x 5mm )

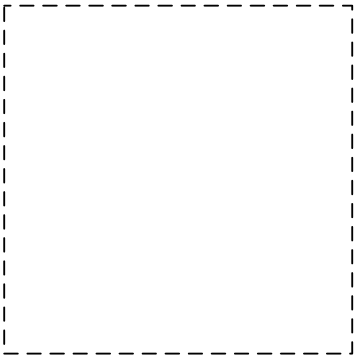

| LQFP64 | LQFP48 / QFN48 | | & I | | |
|---|---|---|---|---|---|
| | | | | UART3_RX<br>GP16C4T2_CH2<br>KBCU_COL7 | |
| 39 | — | PC08 | I/O | SPI3_MISO<br>UART3_CTS<br>GP16C4T2_ETR<br>GP16C4T2_CH3<br>KBCU_COL8 | — |
| 40 | — | PC09 | I/O | SPI3_MOSI<br>UART3_RTS<br>GP16C4T1_ETR<br>GP16C4T2_CH4<br>GP16C2T3_CH2<br>KBCU_COL9 | — |
| 41 | 29 | PA08 | I/O | I2S1_MCK<br>CSU_SYNC<br>UART1_CK<br>GP16C2T3_CH1<br>AD16C4T1_CH1<br>MCO<br>KBCU_ROW2_B | — |
| 42 | 30 | PA09 | I/O | UART1_TX<br>GP16C2T1_BKIN<br>GP16C2T3_CH1N<br>AD16C4T1_CH2<br>MCO<br>KBCU_ROW3_R | — |
| 43 | 31 | PA10 | I/O | USB_CID<br>UART1_RX<br>GP16C2T3_BKIN<br>AD16C4T1_CH3<br>KBCU_ROW3_G | — |
| 44 | 32 | PA11 | I/O | SPI1_MISO<br>I2S1_SDI<br>UART1_CTS<br>AD16C4T1_CH4<br>CMP1_OUT | USB_DM |
| 45 | 33 | PA12 | I/O | SPI1_MOSI<br>I2S1_SDO<br>UART1_RTS<br>AD16C4T1_ETR<br>CMP2_OUT | USB_DP |
| 46 | 34 | PA13 | I/O | SWDIO<br>USB_CID<br>IR_OUT<br>GP16C2T3_CH2<br>AD16C4T1_CH1<br>KBCU_COL22<br>KBCU_COL20 | — |
| 47 | 35 | VSSH | G | GROUND | |
| 48 | 36 | VDDUSB | P | USB POWER | |
| 49 | 37 | PA14 | I/O | SWCLK<br>UART2_TX<br>GP16C4T2_CH4<br>AD16C4T1_BKIN<br>CMP1_OUT<br>KBCU_COL23<br>KBCU_COL21 | — |
| 50 | 38 | PA15 | I/O | SPI1_NSS<br>I2S1_WS | — |

| LQFP64 | LQFP48 / QFN48 | | & I | | |
|---|---|---|---|---|---|
| | | | | UART2_RX<br>GP32C4T1_ETR<br>GP32C4T1_CH1<br>GP16C4T2_CH3<br>UART4_RTS<br>CMP2_OUT<br>KBCU_ROW3_B | |
| 51 | — | PC10 | I/O | SPI3_NSS<br>UART4_TX<br>UART3_TX<br>SPI1_SCK<br>I2S1_CK<br>KBCU_COL10 | — |
| 52 | — | PC11 | I/O | SPI3_SCK<br>UART4_RX<br>UART3_RX<br>SPI1_MOSI<br>I2S1_SDO<br>KBCU_COL11 | — |
| 53 | — | PC12 | I/O | SPI3_MISO<br>I2C1_SCL<br>SPI1_NSS<br>I2S1_WS<br>KBCU_COL12 | — |
| 54 | — | PD02 | I/O | I2C1_SDA<br>UART3_RTS<br>GP16C4T2_ETR<br>SPI1_MISO<br>I2S1_SDI<br>KBCU_ROW4_B | — |
| 55 | 39 | PB03 | I/O | SPI1_SCK<br>I2S1_CK<br>GP32C4T1_CH2<br>GP16C2T2_CH2<br>AD16C4T1_CH3N<br>SPI1_NSS<br>I2S1_WS<br>WKUP3<br>KBCU_KEY3 | — |
| 56 | 40 | PB04 | I/O | SPI1_MISO<br>I2S1_SDI<br>GP16C4T2_CH1<br>GP16C2T3_BKIN<br>AD16C4T1_CH2N<br>SPI1_MOSI<br>I2S1_SDO<br>WKUP4<br>KBCU_KEY4 | — |
| 57 | 41 | PB05 | I/O | SPI1_MOSI<br>I2S1_SDO<br>I2C1_SMBA<br>GP16C4T2_CH2<br>GP16C4T3_CH1<br>GP16C2T2_BKIN<br>AD16C4T1_CH1N<br>SPI1_MISO<br>I2S1_SDI<br>WKUP5<br>KBCU_KEY5 | — |
| 58 | 42 | PB06 | I/O | SPI3_MISO<br>I2C1_SCL<br>UART1_TX | — |

| | | |
|---|---|---|
| USB | USB_CID | USB ID |
| | USB_DP | USB D+ |
| | USB_DM | USB D- |
| | CSU_SYNC | CSU |
| KEY/LED | KBCU_KEYy | KBCU KEYy , (y=0~6) |
| | KBCU_ROWy_R | KBCU ROWy LED PWM , (y=0~6) |
| | KBCU_ROWy_G | KBCU ROWy LED PWM , (y=0~6) |
| | KBCU_ROWy_B | KBCU ROWy LED PWM , (y=0~6) |
| | KBCU_COLy | KBCU COLy , (y=0~23) |
| | ADINy | ADC y , (y=0~15) |
| | CMPx_INP | CMPx , (x=1,2) |
| | CMPx_INNy | CMPx y, (x=1,2; y=n/a,4,5,6) |
| | CMPx_OUT | CMPx , (x=1,2) |

3-2

4

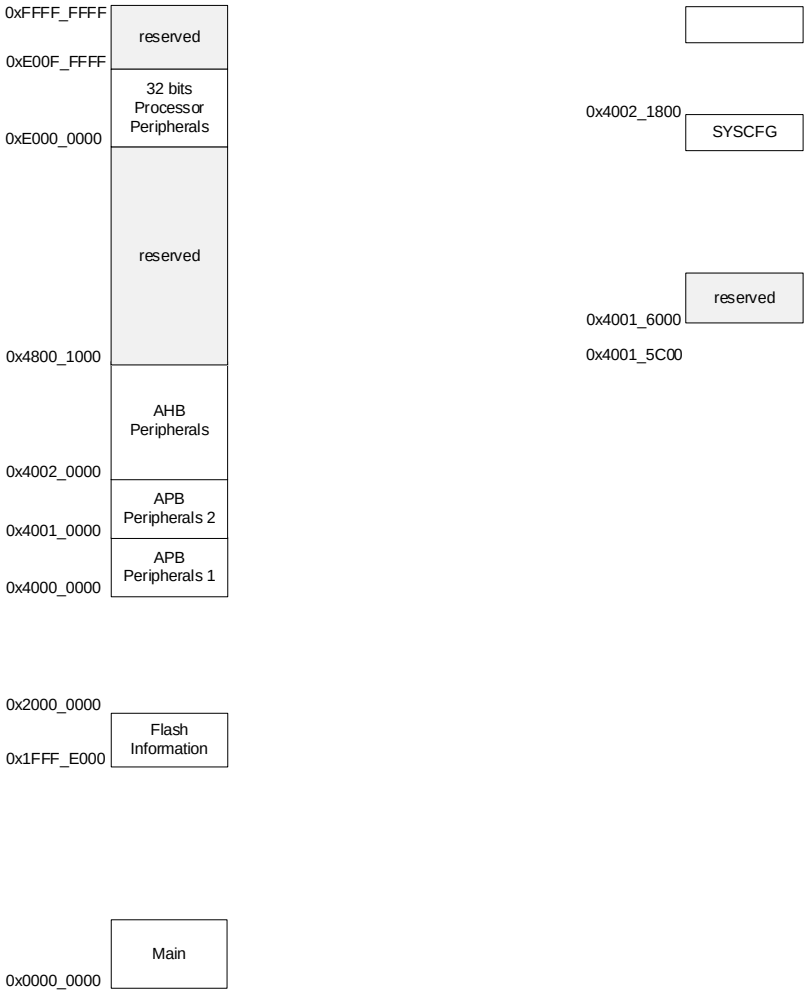
0xFFFF_FFFF
reserved
0xE00F_FFFF
32 bits Processor Peripherals
0xE000_0000
reserved
0x4800_1000
AHB Peripherals
0x4002_0000
APB Peripherals 2
0x4001_0000
APB Peripherals 1
0x4000_0000
0x2000_0000
Flash Information
0x1FFF_E000
Main
0x0000_0000
0x4002_1800
SYSCFG
reserved
0x4001_6000
0x4001_5C00

# 5

## 5. 1

### 5. 1. 1

(

)

$T_A$=25°C $V_{DDH}$ =

$V_{DDA}$ = 5V(1.8V ≤ $V_{DDH}$ ≤ 5.5V)

### 5. 1. 2

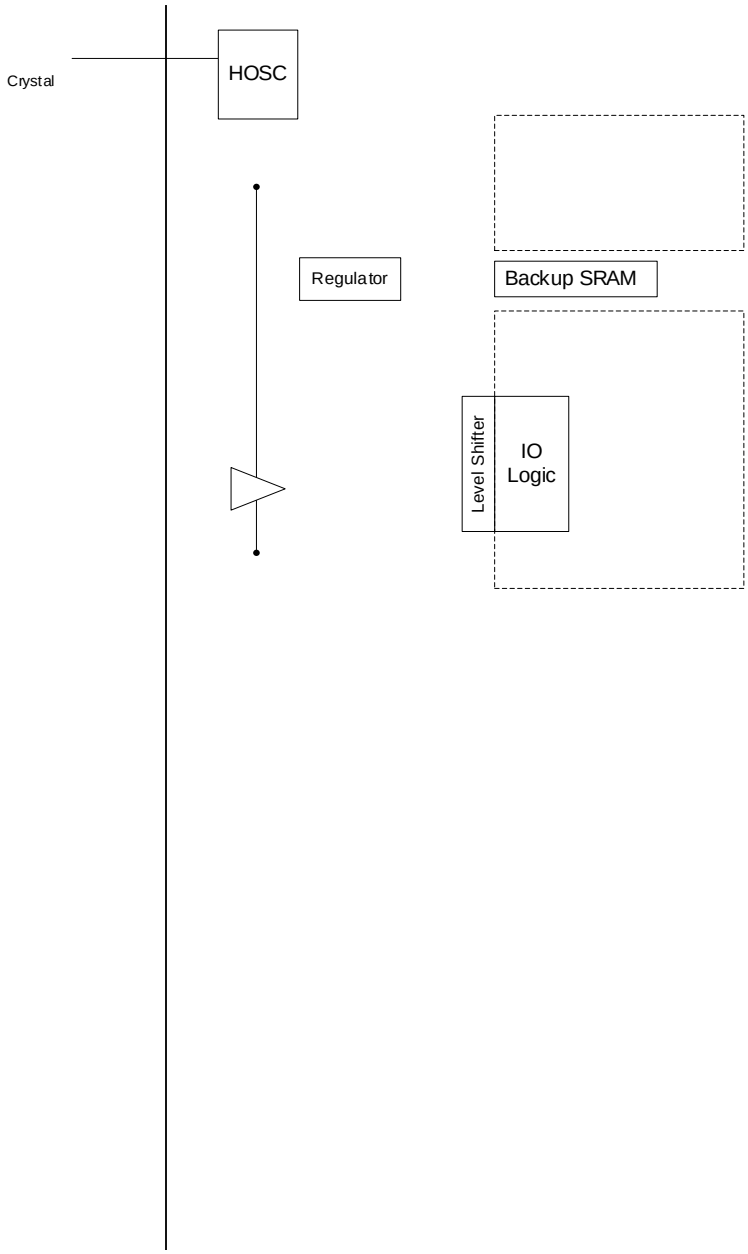

5. 1. 3

VDDH $V_{DD}$
GPIO

LED

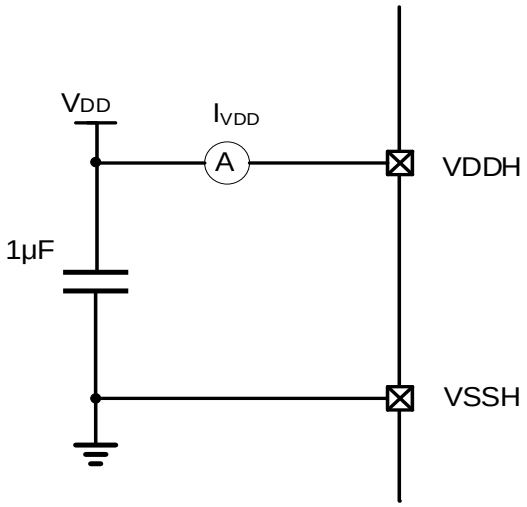


5-2

# 5. 2

## 5. 2. 1

| | | | | |
|---|---|---|---|---|
| $V_{DD}$ | ( $V_{DDH}$, $V_{DDA}$) | – 0.3 | 7.5 | V |

# 5. 3

## 5. 3. 1

| | | | | | |
|---|---|---|---|---|---|
| $f_{HCLK}$ | AHB | – | – | 72 | MHz |
| $f_{PCLK1}$ | APB1 | – | – | 72 | MHz |
| $f_{PCLK2}$ | APB2 | – | – | 72 | MHz |
| $V_{DDH}$ | | – | 1.8 | 5.5 | V |
| $V_{DDA}$ | ( ADC) | $V_{DDA} \geq V_{DDH}$ | $V_{DDH}$ | 5.5 | V |
| | ( ADC) | | 2.4 | 5.5 | |
| $T_A$ | | – | -40 | 85 | °C |
| $T_J$ | | – | – | 125 | °C |

5-4

## 5. 3. 2

| | | | | | |
|---|---|---|---|---|---|
| $t_{VDDH}$ | $V_{DDH}$ | – | 0 | ∞ | μs/V |
| | $V_{DDH}$ | – | 20 | ∞ | |
| $t_{VDDA}$ | $V_{DDA}$ | – | 0 | ∞ | |
| | $V_{DDA}$ | – | 20 | ∞ | |

5-5

## 5. 3. 3

| | | | | | | |
|---|---|---|---|---|---|---|

V

## 5. 3. 4

### 5. 3. 4. 1

IO ( )
HOSC 8MHz PLL0( HOSC)
dhrystone
FLASH
FLASH (Prefetch)
$f_{PCLK1}=f_{HCLK}/2$, $f_{PCLK2}=f_{HCLK}/2$
( HRC,HRC48,LRC,LOSC)

FLASH

| | | | f | Wit | | |
|---|---|---|---|---|---|---|
| $I_{VDDH}$ | | HOSC ($T_A$=25°C,$V_{DDH}$=5V) | 72MHz | 2 | 12.1 | mA |
| | | | 60MHz | 2 | 10.4 | |
| | | | 48MHz | 1 | 9.1 | |
| | | | 40MHz | 1 | 8.0 | |
| | | | 32MHz | 1 | 6.8 | |
| | | | 24MHz | 0 | 6.1 | |
| | | | 16MHz | 0 | 4.7 | |
| | | | 8MHz | 0 | 3.5 | |
| | | | 4MHz | 0 | 2.9 | |
| | | HOSC ($T_A$=25°C,$V_{DDH}$=5V) | 72MHz | 2 | 6.4 | |
| | | | 60MHz | 2 | 5.4 | |
| | | | 48MHz | 1 | 4.9 | |
| | | | 40MHz | 1 | 4.2 | |
| | | | 32MHz | 1 | 3.5 | |
| | | | 24MHz | 0 | 3.3 | |
| | | | 16MHz | 0 | 2.4 | |
| | | | 8MHz | 0 | 1.7 | |
| | | | 4MHz | 0 | 1.3 | |

5-7

SRAM

5. 3. 4. 2

SLEEP



STANDBY1

| | | | | | | | |
|---|---|---|---|---|---|---|---|
| | | | | | | | |
| | | | $T_A$=25 | | | $T_A$=85 | |
| | | | 1.8V | 3.3V | 5.0V | 5.0V | |
| | | RTC(LOSC) ON,<br>IWDT(LRC) ON | 1.8 | 2.5 | 3.6 | 4.5 | μA |

$I_{STANDBY1}$ STANDBY1
( )

5. 3. 6

| | | | | | | |
|---|---|---|---|---|---|---|
| $f_{HOSC}$ | HOSCI | – | 1 | – | 32 | MHz |
| $V_{HOSC\_HIGH}$ | HOSCI | – | 0.7* $V_{DDH}$ | – | $V_{DDH}$ | V |
| $V_{HOSC\_LOW}$ | HOSCI | – | $V_{SSH}$ | – | 0.3* $V_{DDH}$ | V |

( / )
(LOSC) 32.768 kHz

| | | | | | | |
|---|---|---|---|---|---|---|
| $f_{LOSC}$ | | – | – | 32.768 | – | kHz |
| $R_F$ | | – | – | 4,000 | – | kΩ |
| $g_m$ | | | | | | |

## 5. 3. 7

4M RC

| | | | | | | |
|---|---|---|---|---|---|---|
| $f_{HRC}$ | | $V_{DDH}$=5V, $T_A$=25°C | 3.98 | 4 | 4.04 | MHz |
| $ACC_{HRC}$ | HRC | $T_A$= 25°C | -0.5 | – | 1.0 | % |
| | | $T_A$= 0 to 70°C | -1.5 | – | 2.5 | % |
| | | $T_A$= – 40 to 85°C | -4.4 | – | 2.8 | % |
| $t_{START(HRC)}$ | HRC | – | – | 8 | – | µs |
| $I_{DD}$ | HRC | – | – | 45 | – | µA |

5-19 4M RC

48M RC

| | | | | | | |
|---|---|---|---|---|---|---|
| $f_{HRC48}$ | | $V_{DDH}$=5V, $T_A$=25°C | 47.8 | 48 | 48.2 | MHz |
| | | $T_A$= 25°C | -2î ö Ö2 | î ö Ö2 | | |

$ACC_{HRC48}$ HRC48

### 5.3.8 PLL

| | | | | | | |
|---|---|---|---|---|---|---|
| $f_{PLL\_IN}$ | PLL | – | 3 | 4 | 16 | MHz |
| $f_{PLL\_OUT}$ | PLL | – | 4 | – | 72 | MHz |
| $f_{VCO\_OUT}$ | PLL VCO | – | 256 | – | 576 | MHz |
| $t_{LOCK}$(1) | PLL | VCO freq = 576 MHz | 15 | – | 25 | µs |
| $t_{START(PLL)}$(1) | PLL | VCO freq = 256 MHz | 40 | – | 50 | µs |
| | | VCO freq = 576 MHz | 40 | – | 60 | |
| Jitter | PLL | RMS | – | 341.5 | – | ps |
| | | peak to peak | – | 1.36 | – | ns |
| $I_{DD}$ | PLL | $f_{PLL\_OUT}$ = 72MHz | – | – | 1 | mA |

5-22 PLL

:

1.

### 5.3.9 FLASH

| | | | | | | |
|---|---|---|---|---|---|---|
| $t_{PROG}$ | 32 | – | – | 25 | – | µs |
| $t_{ERASE}$ | | (page) = 512B | – | 2 | – | ms |
| | | (sector)= 2KB(4 page) | – | 2 | – | ms |
| $t_{ME}$ | | RP=level 0, WP/UCRP | – | 8 | – | ms |
| | | RP=level 0, WP/UCRP | 2 | – | 126 | ms |
| $I_{DD}$ | | | – | 1 | – | mA |
| | | | – | 1 | – | mA |
| | | Flash STANDBY | – | 30 | – | µA |
| | | Flash STOP | – | 10 | – | µA |
| $V_{PROG}$ | | – | – | – | 10 | V |
| $N_{END}$ | / | $T_A$ = -40 to +85 °C | 100000 | – | – | Cycles |

## 5. 3. 12 I O

IO DC

| | | | | | | |
|---|---|---|---|---|---|---|
| $V_{IL}$ | I/O (CMOS) | $T_A$ = -40 to +85 °C<br>$V_{DDH}$=5V | – | – | 0.3*<br>$V_{DDH}$ | V |
| | I/O (TTL) | | – | – | 0.8 | V |
| $V_{IH}$ | I/O (CMOS) | | 0.7*<br>$V_{DDH}$ | – | – | V |
| | I/O (TTL) | | 2 | – | – | V |
| $I_{IOLEAK}$ | I/O | $V_{SSH} \le V_{IN} \le V_{DDH}$ | – | – | 400 | pA |
| $R_{PU}$ | GPIO (USB ) | $V_{IN} = V_{SSH}$ | – | 50 | – | kΩ |
| $R_{PD}$ | GPIO (USB ) | $V_{IN} = V_{DDH}$ | – | 50 | – | kΩ |
| $t_{IOGLITCH}$ | I/O ( FIR=1) | – | – | 20 | – | ns |

250.002 Tc -0.0021

IO AC

| | | | | | | |
|---|---|---|---|---|---|---|
| $f_{IOOUT\_MAX}$ | | $C_L$= 50 pF,$V_{DDH}$ > 2 V, (DS=0) | – | – | 56 | MHz |
| | | $C_L$= 50 pF,$V_{DDH}$ > 2 V, (DS=1) | – | – | 72 | MHz |
| $t_{IOFALL}$ | | $C_L$= 50 pF,$V_{DDH}$ > 2 V, (DS=0) | – | – | 4 | ns |
| | | $C_L$= 50 pF,$V_{DDH}$ > 2 V, (DS=1) | – | – | 3.7 | ns |
| $t_{IORISE}$ | | $C_L$= 50 pF,$V_{DDH}$ > 2 V, (DS=0) | – | – | 7 | ns |
| | | $C_L$= 50 pF,$V_{DDH}$ > 2 V, DS=1 | – | – | 4.2 | ns |
| $t_{IOPULSE}$ | EXTI | | | | | |

5. 3. 12. 1 I /O

5. 3. 12. 2 I /O ( DS =

5-7 $I_{OL}$, $V_{OL}$

### 5. 3. 13 NRST



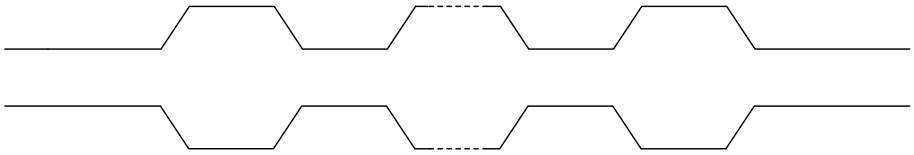

5. 3. 15. 3 USBFS

| | | | |
|---|---|---|---|
| | | | |

## 5. 3. 16 A D

| | | | | | | |
|---|---|---|---|---|---|---|
| $V_{DDA}$ | | – | 2.4 | – | 5.5 | V |
| $V_{REFP}$ | ADC | $V_{DDA} = V_{REFP}$ | 2.4 | – | 5.5 | V |
| $I_{ADC}$ | ADC | $V_{DDA}$=5V | – | 1.5 | – | mA |
| $f_{ADC}$ | ADC | – | 0.6 | – | 12 | MHz |
| $f_S$ | | 12 | – | – | 0.8571 | MHz |
| | | 10 | – | – | 1 | |
| | | 8 | – | – | 1.2 | |
| | | 6 | – | – | 1.5 | |
| $f_{TRIG}$ | | $f_{ADC}$ = 12 MHz | – | – | 823 | kHz |
| | | – | – | – | 17 | $1/f_{ADC}$ |
| $V_{AIN}$ | | – | 37 | – | $V_{REFP}$-50 | mV |
| $R_{AIN}$ | | – | – | – | 277.67 | kΩ |
| $R_{ADC}$ | | – | – | 1.18 | – | kΩ |
| $C_{ADC}$ | | – | – | 8.5 | – | pF |
| $t_{CAL}$ | | $f_{ADC}$ = 12MHz | – | 3.42 | – | μs |
| $t_S$ | | $f_{ADC}$ = 12MHz | 0.125 | – | 21.375 | μs |
| | | – | 1.5 | – | 256.5 | $1/f_{ADC}$ |
| $t_{START}$ | | $f_{ADC}$ = 12MHz | – | 1.75 | – | μs |
| $t_{CONV}$ | ( ) | $f_{ADC}$ = 12 MHz<br>12 | 1.1667 | – | 22.417 | μs |
| | | 12 | 14 269 ( $t_S$ + 12.5<br>12.5 ) | | | $1/f_{ADC}$ |
| $ERR_{DNL}$ | | $f_{ADC}$=12MHz | – | ±3 | – | LSB |
| $ERR_{INL}$ | | $f_{ADC}$=12MHz | – | ±10 | – | LSB |

5-34 ADC

$R_{AIN}$

$$R_{AIN} = \frac{T_S}{f_{ADC} \times C_{ADC} \times \ln(2^{N+1})} \quad \text{IR}_{ADC}$$

| Ts ( ) | $t_s$ (µs |
|---|---|

5. 3. 19

| | | | | | | |
|---|---|---|---|---|---|---|
| $V_{REFINT}$(1) | (BandGap) | $T_A$=-40 to +85 , $V_{DDA}$=5V | 1.20 | 1.22 | 1.24 | V |
| $V_{RESSRC}$(2) | | RESEN=1, RESSRC=0 | – | $V_{REFINT}$ | – | V |
| | | RESEN=1, RESSRC=1 | – | $V_{DDA}$ | – | V |
| $V_{RES}$(3) | | VRESSEL=000, ADIN18/CMPx_INN | – | 1/4 | – | $V_{RESSRC}$ |
| | | VRESSEL=001, ADIN18/CMPx_INN | – | 1/2 | – | |
| | | VRESSEL=010, ADIN18/CMPx_INN | – | 3/4 | – | |
| | | VRESSEL=011, ADIN18/CMPx_INN | – | 1 | – | |
| | | VRESSEL=100, ADIN18 | – | 1/16 | – | |
| | | VRESSEL=101, ADIN18 | – | 15/16 | – | |

5 38

:

1. $V_{REFINT}$ ADIN17 ADC SYSCFG_ADCVREF VDDA
2. $V_{RESSRC}$ $V_{REFINT}$ $V_{DDA}$ SYSCFG_PWR.RESSRC
3. $V_{RES}$ 6 ADIN18 CMP1_INN CMP2_INN ± 0.8%

# 6

## 6. 1 LQFP 48 (7x7mm)

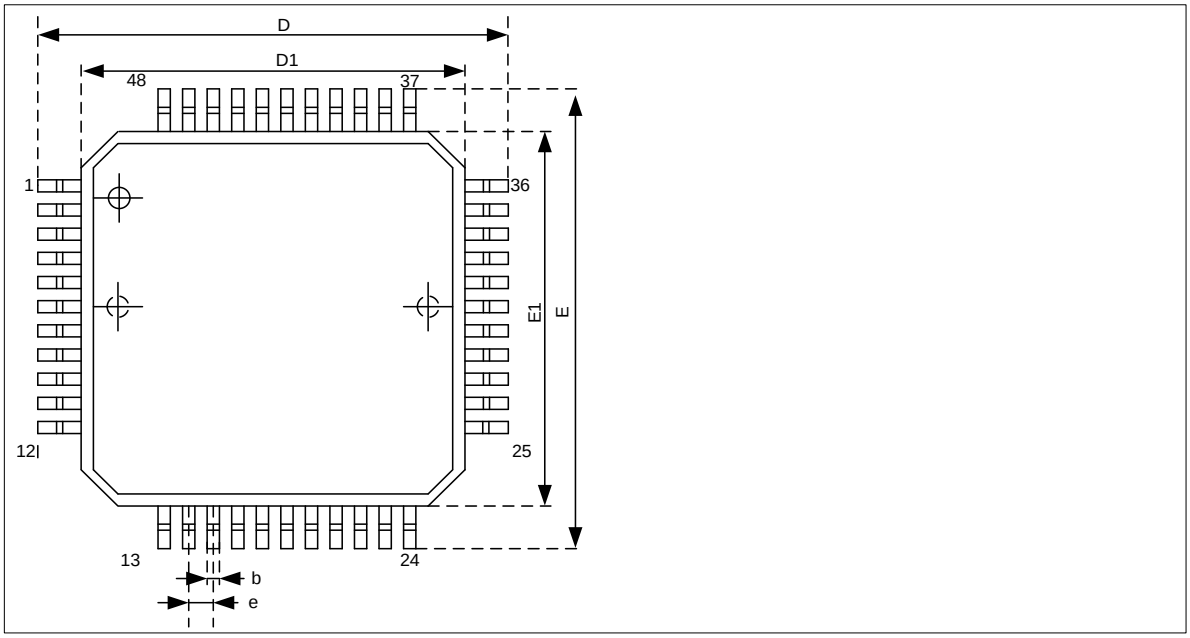

## 6. 3 LQFP64 (10x10mm)

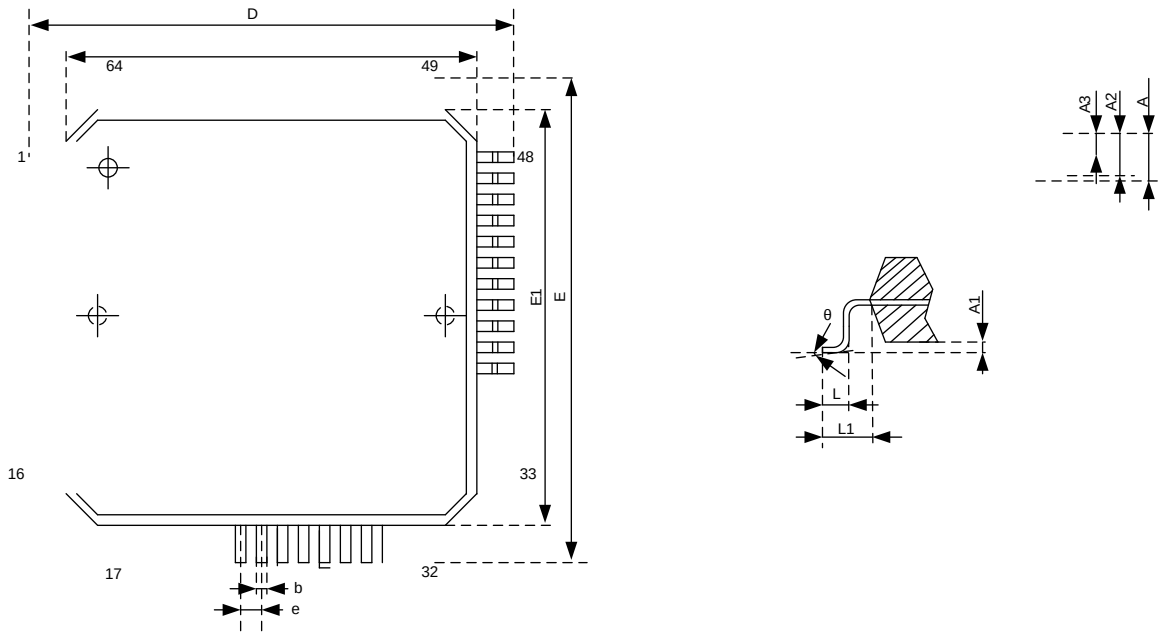

## 6. 4 QFN48 (5x5mm)

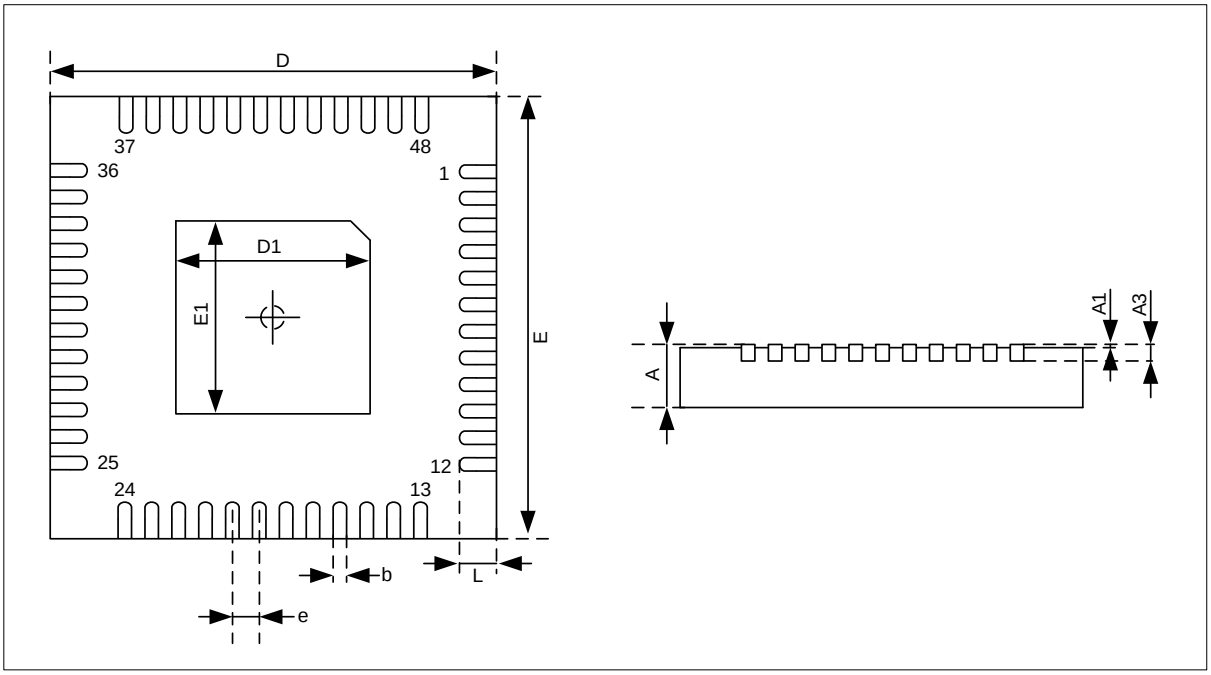


6-4 QFN 48(5x5mm)

| | mm | | |
|---|---|---|---|
| | MIN | NOM | M |
| A | 0.70 | 0.75 | 0.80 |
| A1 | 0.00 | 0.02 | 0.05 |
| A3 | 0.203 REF | | |
| D | 5.00 BSC | | |
| D1 | 3.60 | 3.70 | 3.80 |
| E | 5.00 BSC | | |
| E1 | 3.60 | 3.70 | 3.80 |

| | | |
|---|---|---|
| V1.0 | 2022-12-02 | |
| V1.1 | 2023-04-17 | 5.3.16 |
| | 2023-05-05 | Bootloader Bootrom |
| | 2023-05-23 | 1. ADC $V_{AIN}$<br>2. |
| V1.2 | 2023-06-30 | HRC<br>$V_{REFINT}$ |
| | 2023-07-04 | SPI |
| V1.3 | 2024-07-16 | “ 2-1 ” SPI |
| V1.4 | 2024-11-08 | 1. FS026C7N<br>2.<br>3. |