32 } MCU
ES32H0584

ž { ¼

† × ñ1° û

; ž { ¼

† ò63 { ¼

:#§ LEŸE-# Þ+e € 9L€ œ (

2025-11-20

.- …

. 2-1 ES32H0584 3+ G3+5 v 9
. 3-1 ES32H0584LQE LQFP48 N¦?ö 19
. 3-2 ES32H0584LKE LQFP32 N¦?ö 20
. 4-1 ˆ Ø ˜ P 4 27
. 5-1 8ß(w+e$À 28
. 5-2 +e#q#{Gÿ 28
. 5-3 FG _9‘ ˜F Õ 33
. 5-4 ¦ ƒ _9‘ ˜1y x+eD /j ? 33
. 5-5 MRST Ä+X+eD 1 47
. 5-6 MRST Ä+X+eD 2 47
. 5-7 MRST Ä+X+eD 3 48
. 5-8 MRST Ä+X+eD 4 48
. 5 -9 I2C

>˜- …

>˜ 2-1 ˜ &Ct$À G>˜ 8
>˜ 2-2 Ê & ˜ Ï7- 15
>˜ 2-3 UART0~4 § ƒ Ï7-G}5ž 17
>˜ 3-1 ES32H0584LQE 1Ñ7J Ï7- Ê y 22
>˜ 3-2 ES32H0584LKE 1Ñ7J Ï7- Ê y 24
>˜ 5-1 ±L€+e » ò 29
>˜ 5-2 ±L€+e#q ò 29
>˜ 5-3 ±L€' ò 29
>˜ 5-4 8ß(wFJ hF >| ‘ & 30
>˜ 5-5 8ß(w X :+e ¼ ¹+e &,´ ò ‘ & 30
>˜ 5-6 = } ¼+e$À1Ñ*6 Q ‡+e"D ò 31
>˜ 5-7 RUN/SLEEP Q ?+e#q(© W Ä0; ¿ X FLASH]F >| Å 31
>˜ 5-8 STOP Q ?+e#q(© W 31
>˜ 5-9 FG Q FO _9‘ &JÏ(© W ò 32
>˜ 5-10 FG ~FO _9‘ &JÏ(© W ò 32
>˜ 5-11 µG Q FOHRC _9‘ ˜(© W 34
>˜ 5-12 µG ~FOLRC _9‘ ˜(© W 34
>˜ 5-13 PLL +e"D ò 35
>˜ 5-14 ˆ Ø ˜(© W ò 35
>˜ 5-15 EMS ò 36
>˜ 5-16 ESD 0 WNÍ Ê I 36
>˜ 5-17 LU 0 WNÍ Ê I 36
>˜ 5-18 I/O 1 DC +e"D(© W>˜ 37
>˜ 5-19 MRST +e"D(© W 47
>˜ 5-20 Ê & ˜(© W ò 49
>˜ 5 -21 µG Lö @+eD k4ï I2C (© W ò 49
>˜ 5-22 SPI (© W ò 50
>˜ 5-23 ~ Ï6G Q ? TGÂ(© W 52
>˜ 5-24 ADC (© W ò 53
>˜ 5-25 ADC 2î Ö(© W 1 53
>˜ 5-26 ADC 2î Ö(© W 2 54
>˜ 5-27 ADC µG ò63+e »(© W ò 54
>˜ 5-28 ACMP (© W ò 54
>˜ 5-29 VDD 6 » ˜(© W ò 55
>˜ 5-30 OPA (© W ò 55

1\

1\21 ²F

ES32H0584 Þ × f ˜ _ 03+ GLö @ ¶Q W7- ~ Ï6G 32 } ARM Cortex-M0 µ h ,´ Þ × f ˜ ÄB 8ß (w,´ 0Q ŒNÁ)· j 72MHz ÄMŽFlash ECC Q ? 0Q j 80MHz ÅÈ § 9 256 Kbytes Flash ¼ 24Kbytes SRAM | • ? ˆ Ø ˜ Ä Ë ¯# D Q x,´ Ï7- Q ‡ È ú1V 8 7 ö,´FJAß Õ È 5 [2 Z I2C È2 Z SPI È5 Z UART È1 ZQ 4× 6 FJFƒ16 } Ê & ˜ Ä AD16C6TÅ 3 ZFJ+X4 FJFƒ16 } Ê & ˜ ÄGP16C4T ÅÈ1 Z ~ Ï6G 16 } Ê & ˜ ÄLP 16T ÅÈ2 Z * \ 16 } Ê & ˜ Ä BS16T ÅÈ1 Z 12 }Q FO ADC È3 Z Q " E³ ˜ ACMP È1 ZF n OPA Ä

ES32H0584 Þ × f ˜,´ Œ+e » ¼$Y Ö 6 [j 2.2V~5.5V ¼-40 ~105 Ä

ES32H0584 Þ × f ˜F2+X ¾ ¯# ,´ Ä+X È ²,-8¢ æ+e Ã J × f Ã ª7- æ+e Ã+e j × f 1y Ä

2. 1 ˜ &Ct$À

		ES32H0584LQE	ES32H0584LKE
Flash ˆ Ø Ä KBytes Å		256	256
SRAM ÄKBytes Å		24	24
GPIO		46	30
12-bit ADC Channel		23	14
Q " E³ ˜		3	3
F 1Ç n W ˜		1	1
Ê & ˜	Q 4× Ê & ˜ AD16C6T	1	1
	FJ+X Ê & ˜ GP16C4T	3	3
	~ Ï6G Ê & ˜ LP16T	1	1
	* \ Ê & ˜ BS16T	2	2
FJ	I2C	2	2
	SPI	2	2
	UART	1+4	1+4
µ h 0Q F >|NÁ)·		80/72MHz	80/72MHz
Œ+e »93 $		2.2V~5.5V	2.2V~5.5V
1>õ		LQFP48	LQFP32

>˜ 2-1 ˜ &Ct$À G>˜

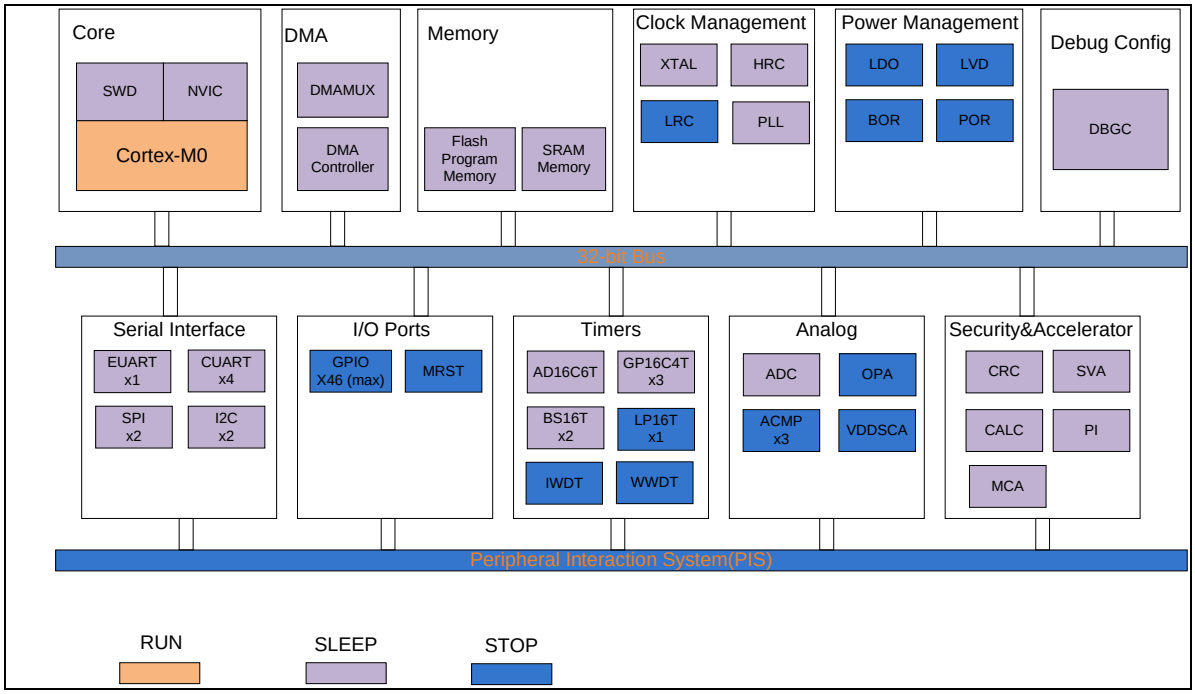

. 2-1 ES32H0584 3+ G3+5 v .

2. 2. 3 3+5 1Ñ*6

2. 2. 3. 1 +e$À

VDD Ö8ß(w k+e$À ÈFJE÷1Ñ7JVDD j p 9 IO ú µG 0c » ˜ Ë+e È Õ 2.2V~5.5V +e$ÀÄ

2. 2. 3. 2 +e$À- ?ö

‘ :+e = } Ä POR ÅÖ ƒ VDD ~ ¾ VPOR/VPDR & È ˜ & 4 ¾ = }(æ 1 Ä

‘ !P » = } Ä BOR ÅÖ :+e OL$ È!P » = } Ä BOR Å 6 ¯ ˜ & 1 = }(æ 1 È-$ `+e $À+e »Eî ` pG}5ž,´ VBOR L8 l Å&v _ 1 7 Z VBOR L8 l F9 È*ƒ+e$À+e »VDD L}8# pF9 VBOR L8 l ; & È 6 ¯ ˜ & = } Ä

‘ ~+e »- #{ ÄLVD ÅÖLVD +X ¾- ?ö VDD +e$À ÈFJE÷Aî5žLVDEN ¯7- LVD È 6 VDD +e » ¼ LVDS pF9 ,´+e »L8 lF >|" E³ È ×+O LVD] Ý Ä

2. 2. 3. 3 ~ Ï6G Q ?

ES32H0584 3+ GÞ × f ˜ _ 1 ; ~ Ï6G Q ? • Î)à ~ Ï6G È FO TGÂ &L$ ú _ 1 TGÂ$À,´4ô 8F9 Ä

‘ SLEEP Q ?

X SLEEP Q ? ; È µ h &JÏ>Û £L Ä p 9 FAî 5 5 Œ ¦FJE÷] Ý F » & TGÂ µ h Ä

‘ STOP Q ?

X STOP Q ? ; È µ h ¼ WG 6 FAî &JÏ>Û £L È HOSC ¼ HRC FJE÷EŸ & 6 [G}5ž j ¯7- Ä 9 ~ Ï6G FAî IWDT ÃWWDT ÃLVD ÃGPIO ÃLPTIM ÃACMP1 1yF 7-5 5 Œ È ¦FJE÷] Ý TGÂ8ß(w Ä G}5ž0c » ˜ LDO X STOP &F • ~ Ï6G Q ? Ä

2. 2. 3. 4 &JÏ1Ñ*6

&JÏ × f ˜) µ h ¼ FAî 6G} = <,´ &JÏ$À È < &1Ñ*6 FAî k &JÏL × ú ~ Ï6G Q ?,´ &JÏL × Ä

‘ &JÏ 6NÁ

FJE÷ s>‘3+5 ,´F >|FO Ö ¼ Ï6G È B3 ¤ µ h ¼ FAî,´ &JÏ 6NÁ" ÈF9 8F2,´ &JÏNÁ)· Ä

‘ &JÏ ¹ ˜ × f

HOSM ÄHSC

- 48MHz~80MHz PLL =NÁ &JÏ

2. 2. 3. 5 -$ Õ ˆ Ø ˜AïL Ä DMA Å

DMA ÄDirect Memory Access Å × f ˜7- O) 0û ¾ µ hF >| µ ˆ ý Œ È L} ~ Ï6G ¼ µ h,´ ŒCO E- Ä _ 1 7 FJFƒ Èÿ Z DMA FJFƒ 6 [ ) Ä 0 Z DMA JD =+X ˜ Ä JD =+X ˜ F9 (w : p 9,´ DMA B"'r$À ÄDMA × f ˜ _ 1 ˆ Ø ˜ ` ˆ Ø ˜ Ã Ø ˜ ` FAî Ã FAî ` ˆ Ø ˜ Ã FAî ` FAî {L$,´ ž PEÃ Ä

ÖDMA × f ˜ Œ X FAî ` FAî Q ? & ÈM0 6 ">ñ },´ DMA PEÃ!Q Aî5ž j 1 È£Aî5ž DMA_CONn a } (% A´ JÏ 5Ÿ pM4>]TJ /T

2. 2. 4 FG Õ

2. 2. 4. 1 FJ+X1 Ä GPIO Å

FJ+X1 ÄGPIO Å 6 j PA ÈPB ÈPC ¼PD 4ô È !ÿ4ôFJ+X1 5 [0 J 16 Z) 0û,´ E7J ÄF Ë E7J …) G}5ž jEÃ • FEÃ * Ä!ÿ Z E7J 9) 0û,´ 0%?EÃ * × f ÈP¡ Ø7- Ë F9 × f È : ù F ; ùF9 È CMOS/TTL EÃ •F9 úEÃ •% # ¯7- × f Ä WG 61 > Q Ï7- ú ¦ ‡ FAî Ï7- =+X Ä!ÿ Z1 6 [_ 1] Ý È 6 j 4 4ô È 6 [P 4 ` 4 Z] Ý AGÿ Ä F È!ÿ Z1 F _ 1@ DMA ž P EÃ,´ Ï7- Ä

2. 2. 5 ¹ ˜1Ñ*6 úF 1Ç ÐFO

2. 2. 5. 1 F 1Ç ÐFO ˜(CALC)

F 1Ç ÐFO ˜(CALC) —>| £ é i Ã V1V 'L”# ú ý!“ 7 ,´.œ &F 1Ç ÐFO Ä

2. 2. 5. 2 0ªL$ AGÿF 1Ç ÐFO ˜ÄSVA Å

SVA ÄSpace Vector Accelerator Å _) g-$#q+e j,´ FOC ÄField Orientated Control Å Ä+X] ,´ h+XF 1Ç Ë ÐFO Ï7- ÈAÑ1Ç *) Ä5 Ì Ë Timer ×+O) Ä,´ PWM EÃ * Ä

- SVPWM
- Clarke !“F6Eœ ’
- Park !“F6Eœ ’
- EÃ •EÃ * ¯+X 91V' 16 } Ê&é >˜/j
- ¯+X AHB &JÏ Œ jF 1Ç &JÏ
- F 1Ç5 • ×+O DMA B'"r
- F 1Ç5 • ×+O] Ý

2. 2. 5. 3 " »0 6 ÐFO˜ ÄPI Å

PI Ë 0 Z ˆ# >0 6F 1Ç,´ ÐFO … s È 9) 0û,´ 2 4ôF 1Ç … sÄ

2. 2. 5. 4 +e j × f ÐFO ˜ Ä MCA Å

2. 2. 6 Ê & ˜

ES32H0584 3+ G15

2. 2. 7 FJ

2. 2. 7. 1 µG Lö @+eD k4ï ÄI2C Å

_ 1 2 D I2C ÄI2C0 ÃI2C1 ÅÄI2C ÄInter-Intergrated Circuit Å k4ï Õ +X Œ Þ × f ˜ ¼ I2C b>| k4ï {L$,´ Õ Ä _ 1 J k Q ? Ï7- È × f p 9 I2C k4ï(© Ê,´ ¿ G Ã• AÞ Ã ">ñ ¼ & ¿ Ä _ 1 7 ö ¼ FO Q ? Ä > SMBus2.0 ¬ é Ä +X ¾ J/ý+XFD È 5 CRC +O @ ¼P¼AßSMBus Ä3+5 1Ñ*6 k4ï Å ú PMBus Ä+e$À1Ñ*6 k4ï ÅÄ

I2C _ 1 DMA) p F1 ¼ Õ f žF >| PEÃ Ä

2. 2. 7. 2 b>| FAî Õ Ä SPI Å

_ 1 2 D SPI Õ ÄSPI0 ÃSPI1 ÅÄSPI ÄSerial Peripheral Interface Å > FG ˜ &F >| z ü / ˜ ü ,´ <!• b>|FJ ÄB Õ G}5ž j k Q ? È XF /ý õ å ; È j F G þ ˜ & ËFJ &JÏ ÄSCK ÅÄB Õ F 7- O X J k Q ?G}5ž ; Œ Ä +X ¾ J/ý+XFD È 5 * ¾ ü4ï,´ … <!• PEÃ È¦] 0 ‘ Œ j ü A ž4ï ÈF ¯+X CRC QP¼ Î)à M•FJ Ä

SPI _ 1 DMA) p F1 ¼ Õ f žF >| PEÃ Ä

2. 2. 7. 3 FJ+X 2!• f ˜ (UART)

_ 1 5 D UART Õ Ä UART0~4È¦] UART0 _ Î j » EUART ÈUART1~4 _ žFJ » CUARTÅ FJ+X 2!• f ˜ ÄUART Å Ë ¶ 0 Z&¥#k,´ é ? È ¯ MCU > FG Aî 7 FJE÷ J 7 ö NRZ ,´ ’ ? Î)à ˜ ü 2!• b>| žFJAß Ä UART ¯+X ? # (©)· +O ˜ È Ë ¶Cµ í,´# (©)·Aî5ž93 $ Ä

UART _ 1 2!•FJAß Q ? ¼ z ü …4ïFJAß È• _ 1 LINÄ \ ` Â6„5•5 ÅÃª7- ‘ •AÞ Ã IrDA Ä4Ò F ž • J Å SIR ENDEC ?ô93 ¼modem #q × ý Œ ÄCTS/RTS ÅÈ < &F _ 1 J jFJAß é ? Ä

_ 1 ¯+X DMA Î)à J5C â jAî5ž È þ6<7- O _ 1Q FO žFJAß Ä

UART Q ?/(© W	

2. 2. 8 Q

2. 2. 8. 1 Q Eœ ' ~ Ä ADC Å

_ 1 1 D Q FŒQ Eœ ' ~ Ä ADCÅ ADC ÄAnalog to Digital Convertor Å _1 YÀ ' À ,Að §1‡ YÀô¤^

3. 1. 2 LQFP32

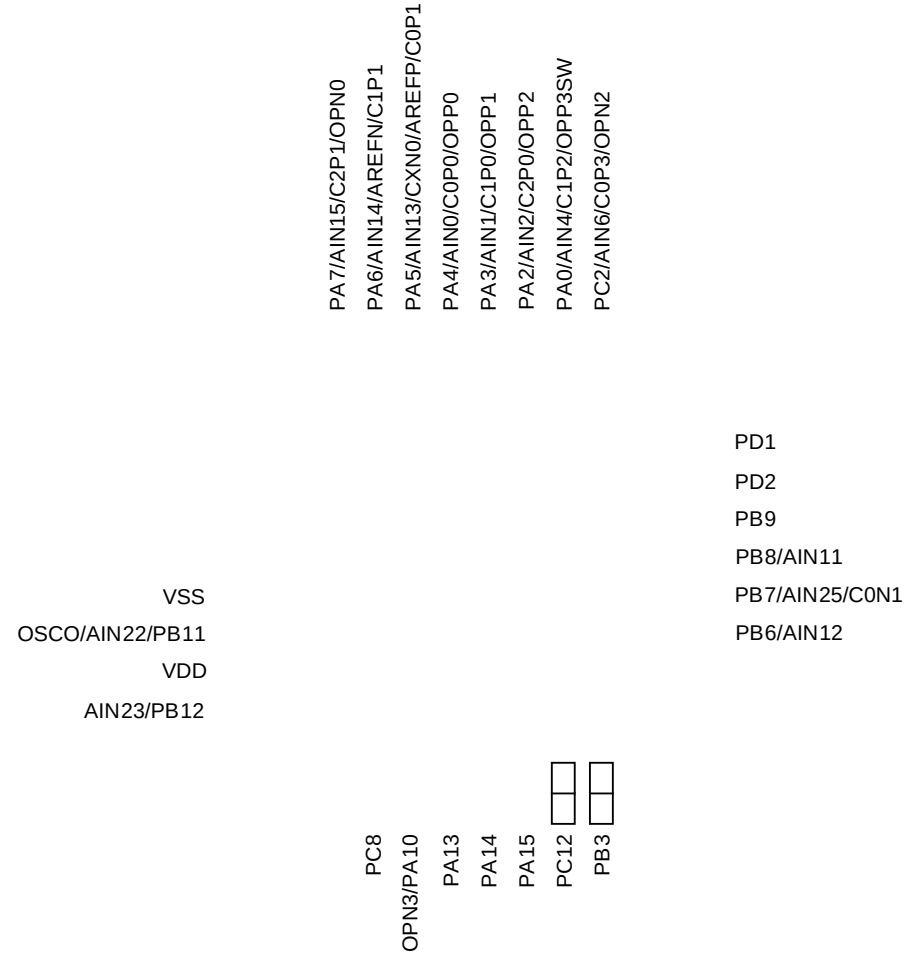
PA7/AIN15/C2P1/OPN0
PA6/AIN14/AREFN/C1P1
PA5/AIN13/CXN0/AREFP/C0P1
PA4/AIN0/C0P0/OPP0
PA3/AIN1/C1P0/OPP1
PA2/AIN2/C2P0/OPP2
PA0/AIN4/C1P2/OPP3SW
PC2/AIN6/C0P3/OPN2
PD1
PD2
PB9
PB8/AIN11
PB7/AIN25/C0N1
PB6/AIN12
VSS
OSCO/AIN22/PB11
VDD
AIN23/PB12
PC8
OPN3/PA10
PA13
PA14
PA15
PC12
PB3

3. 2 1Ñ7J Ï7- Ê y

3. 2. 1 ES32H0584LQE1Ñ7J Ï7- Ê y

PIN NO.	PIN NAME

3. 2. 2 ES32H0584LKE1Ñ7J Ï7- Ê y

PIN NO.	PIN NAME ÄFUNC1 Å	FUNC2	FUNC3	FUNC4	FUNC5	FUNC6	FUNC7	FUNC0 ÄDefault Å
1	PD8/MRST	HSCO						

24	PD1	I2C1_SDA	CUART2_TX	GP16C4T2_CH3	AD16C6T_CH4	PIS_CH1	AD16C6T_BKIN1	AIN10
25	PC2	CUART2_TX	SPI0_MISO	GP16C4T2_CH1	AD16C6T_CH2	PIS_CH2	LP16T_OUT	AIN6/C0P3/OPN2
26	PA0	CUART2_TX	GP16C4T0_CH1	GP16C4T0_ETR	AD16C6T_CH1	PIS_CH0	LP16T_ETR	AIN4/C1P2/OPP3
27	PA2	CUART1_TX	GP16C4T0_CH3	SPI0_MISO	AD16C6T_CH3	PIS_CH2	CUART0_TX	AIN2/C2P0/OPP2
28	PA3	CUART1_RX	GP16C4T0_CH4	SPI0_MOSI	AD16C6T_CH4	PIS_CH3	CUART0_RX	AIN1/C1P0/OPP1
29	PA4	SPI0_NSS	CUART2_TX	GP16C4T1_CH3	AD16C6T_CH1N	PIS_CH4	AD16C6T_BKIN2	AIN0/C0P0/OPP0
30	PA5	SPI0_SCK	CUART2_RX	GP16C4T1_CH4	AD16C6T_CH2N	PIS_CH5	I2C1_SCL	AIN13/CXN0/AREFP/C0P1
31	PA6	SPI0_MISO	CUART3_TX	GP16C4T1_CH1	AD16C6T_CH1	PIS_CH6	I2C1_SDA	AIN14/AREFN/C1P1
32	PA7	SPI0_MOSI	CUART3_RX	GP16C4T1_CH2	AD16C6T_CH1N	PIS_CH7	I2C1_SMBA	AIN15/OPN0/C2P1

>˜ 3-2 ES32H0584LKE 1Ñ7J Ï7- Ê y

1 Ö = }1Ñ7J MRST j ~ 9 x È £ MRST 1Ñ7J j ~+e £ &8ß(w = } Ä
2 Ö ƒ8ß(w 9 J Z VSS `1Ñ7J & ÈM0 X FG 6 p 9 VSS `1Ñ7JF Õ X 0C§ Ä
3 Ö :>˜] PA5 1Ñ7JFUNC0 0 ?,´ 7Aö1V CXN0 È>˜/jB 1Ñ7J =+X j Q " E³ ˜ ACMP0~2 ,´COEÃ •1 0 Ä

3. 3 1Ñ7JÏ7-B$ >

1Ñ7J =0	A/D	1Ñ7JB$ >
PA0~PA15	D	FJ+Xl/O 1
PB0~PB15	D	FJ+Xl/O 1
PC0~PC15	D	FJ+Xl/O 1
PD0~PD11	D	FJ+Xl/O 1
SWCLK	D	5F0;/B3B b>| &JÏ1
SWDIO	D	5F0;/B3B b>| ž1
MRST	D	8ß(w k = } È ~+e £ 9 x
SPIx_SCK	D	SPI &JÏEÃ •1
SPIx_NSS	D	SPI (wF91
SPIx_MISO	D	SPI k ×EÃ •/ þ jEÃ *1
SPIx_MOSI	D	SPI k ×EÃ */ þ jEÃ •1
I2Cx_SCL	D	I2C &JÏEÃ • /EÃ *1
I2Cx_SDA	D	I2C žEÃ • /EÃ *1
I2Cx_SMBA	D	3+5 1Ñ*6 k4ï SMBA (wF91
EUART0_TX	D	EUART F1EÃ *1
EUART0_RX	D	EUART Õ fEÃ •1
EUART0_RTS	D	EUART RTS EÃ *1
EUART0_CTS	D	EUART CTS EÃ •1
EUART0_CK	D	EUART ª7- ‘ Q ? &JÏEÃ *1
CUARTx_TX	D	CUART F1EÃ *1
CUARTx_RX	D	CUART Õ fEÃ •1
CUARTx_RTS	D	CUART RTS EÃ *1
CUARTx_CTS	D	CUART CTS EÃ •1
AD16C6T_CHx	D	AD16C6T FJFƒx
AD16C6T_CHxN	D	AD16C6T Â>• FJFƒx
AD16C6T_BKIN1	D	AD16C6T iE– ÄBRK ÅEÃ •1
AD16C6T_BKIN2	D	AD16C6T iE– 2 ÄBRK2 ÅEÃ •1
AD16C6T_ETR	D	AD16C6T FG @ EÃ •1
AD16C6T_BKOUTx	D	AD16C6T iE– Ø ŒEÃ *1
GP16C4Ty_CHx	D	GP16C4T FJFƒx
GP16C4Ty_ETR	D	GP16C4T FG @ EÃ •1

1Ñ7J =0	A/D	1Ñ7JB$ >
AREFN	A	ADC FG CO A ò63+e »EÃ •1
AIN0~AIN15 ÈAIN17 È AIN19~AIN27	A	ADC Q FJFƒ 0~17,19~27
OPNx	A	OPA COEÃ •1 x
OPPx	A	OPA !“EÃ •1 x
OPAO	A	OPA EÃ *1
OPREFN	A	OPA FG CO ò63+e »1
CyPx	A	ACMPy !“EÃ •1 x
CyN1	A	ACMPy COEÃ •1 1
CXN0	A	ACMP0~ACMP2 COEÃ •1 0
ACMPOx	D	ACMP0~ACMP2 EÃ *1
OSCI	A	FG ¦ƒ _9‘ ˜1
OSCO	A	
VDD	P	3+5 k+e$À
VSS	P	3+5 `

>˜ 3-3 ES32H0584 3+ G,´1Ñ7J Ï7-B$ >

ÖA j Q 1 ÈD j ‡1 ÈP j+e$À/ ` Ä

5. 3 8ß(w ±L€ ò

;>˜ l j8ß(w6@ ,´ ±L€+e"D ò l ÈCµE÷93 $ 7- ,8$8ß(w"h u W.d • Ä

5. 3. 1 +e » ò

7 '	ò	‘ &	0 ? l	0 W l	... }
VDD	8ß(w k+e$À	–	-0.3	6.25	V
VIN	1 EÃ •+e »	–	-0.3	VDD+0.3	V

>˜ 5-1 ±L€+e » ò

5. 3. 2 +e#q ò

7 '	ò	‘ &	0 ? l	0 W l	... }
I_{VDD}	#q4ÿVDD ,´ k+e#q	–	–	100	mA
I_{VSS}	#q4ÿVSS ,´ k+e#q	–	–	100	mA
I_{IO}	ù+e#q ÄEÃ *Q Å	VDD=5V	–	50	mA
	&|+e#q ÄEÃ * ~ Å	VDD=5V	–	50	mA

>˜ 5-2 ±L€+e#q ò

5. 3. 3 ' ò

7 '	ò	‘ &	0 ? l	0 W l	... }
T_{STG}	Ø ˆ$Y Ö	–	-55	150	
T_J	5 $Y	–	–	150	

>˜ 5-3 ±L€' ò

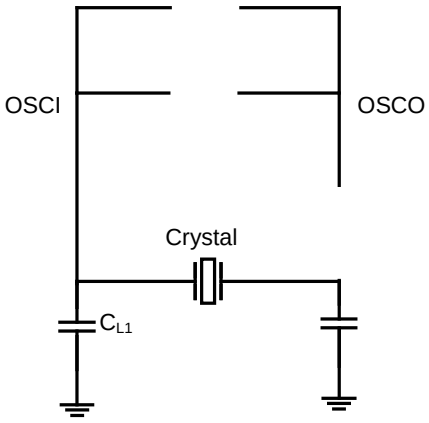
OSCI
OSCO
Crystal
C_{L1}

5. 4. 7 K1-()ß+e"D ò

7 '	ò	‘ &	0 ? I	¨ » I	0 W I	... }
f_{PLL_IN}	PLL EÃ • &JÏ	T_A=-40 to 105°C	3.6	4	4.4	MHz
	PLL EÃ • &JÏ •0ª"	T_A=-40 to 105°C	45	50	55	%
f_{PLL_OUT}	PLL =NÁEÃ * &JÏ	T_A=-40 to 105°C	48	–	80	MHz
t_{LOCK}	PLL K1 Ê &L$	T_A=25	–	80	300	us
I_{PLL}	PLL +e#q	T_A=25 È VDD=5V	–	300	–	uA

5. 4. 11. 2 I/O1 EÃ *(© W .

‹ 8ß(wI/O 1 EÃ *(© W Ä žFJP¡ Ø Å

‘ I_{OL} vs V_{OL} @VDD=2.5V Ä žFJP¡ Ø Å

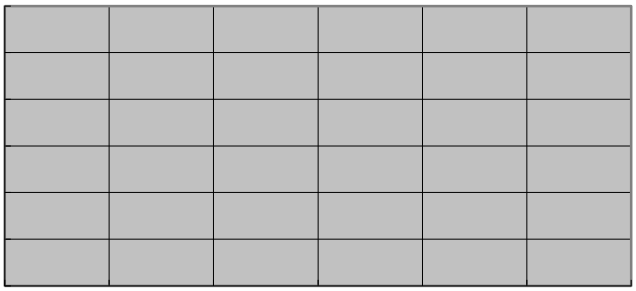

‘ I_{OH} vs V_{OH} @VDD=2.5V Ä žFJP¡ Ø È PC0~PC15 L” F Å

‘ I_{OH} vs V_{OH} @VDD=2.5V Ä žFJP¡ Ø È PC0~PC15 Å

‘ I_{OL} vs V_{OL} @VDD=3.5V Ä žFJP¡ Ø Å

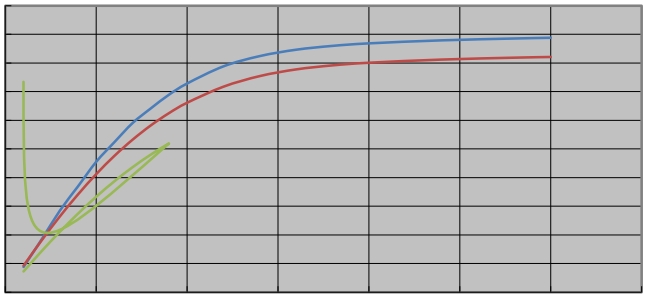

‘ I_{OH} vs V_{OH} @VDD=3.5V Ä žFJP¡ Ø È PC0~PC15 L” F Å

‘ I_{OH} vs V_{OH} @VDD=3.5V Ä žFJP¡ Ø È PC0~PC15 Å

‘ I_{OL} vs V_{OL} @VDD=5.0V Ä žFJP¡ Ø Å

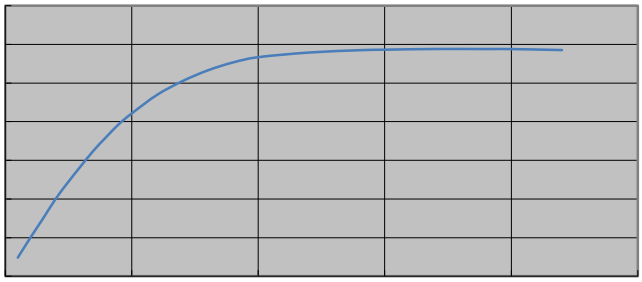

‘ I_{OH} vs V_{OH} @VDD=5.0V Ä žFJP¡ Ø ÈPC0~PC15 L” F Å

‘ I_{OH} vs V_{OH} @VDD=5.0V Ä žFJP¡ Ø ÈPC0~PC15 Å

‘ I_{OL} vs V_{OL} @VDD=3.5V Ä jP¡ Ø Å

‘ I_{OH} vs V_{OH} @VDD=3.5V Ä

‘ I_{OL} vs V_{OL}@VDD=5.5V Ä jP¡ Ø Å

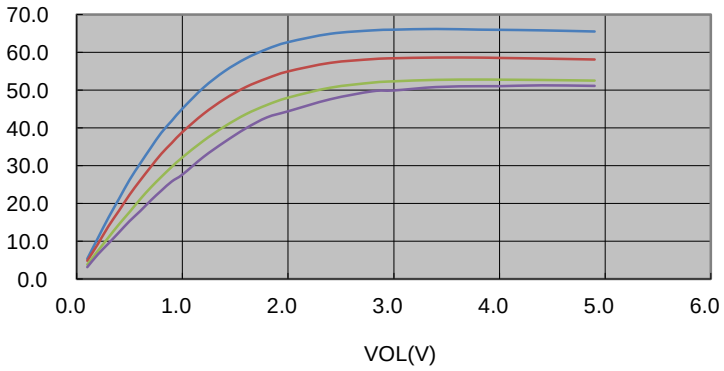

‘ I_{OH} vs V_{OH} @VDD=5.5V Ä jP¡ Ø ÈPC0~PC15 L” F Å

‘ I_{OH} vs V_{OH} @VDD=5.5V Ä jP¡ Ø È PC0~PC15 Å

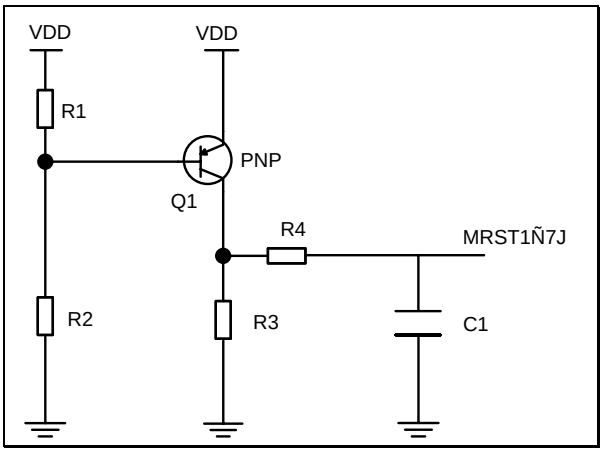

. 5-7 MRST Ä+X+eD 3

ÖG÷+XPNP 9 ±1Ñ = } ÈFJE÷ R1 Ä2Kq Å ¼ R2 Ä10Kq Å 6 » Œ j * ±EÃ • È 4 ± Õ VDD ÈLö+e ± 0D FJE÷ R3 Ä20Kq Å Õ ` È 0D FJE÷ R4 Ä1Kq Å ¼ C1 Ä0.1εF Å Õ ` ÈC1 01 Œ j MRST EÃ • Ä

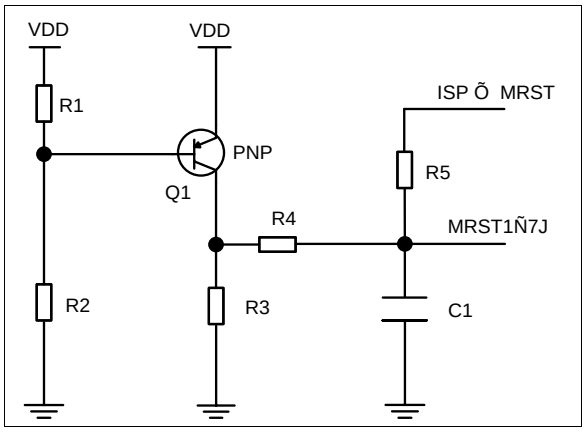

. 5-8 MRST Ä+X+eD 4

1 ÖG÷+XPNP 9 ±1Ñ = } ÈFJE÷ R1 Ä2Kq Å ¼ R2 Ä10Kq Å 6 » Œ j * ±EÃ • È 4 ± Õ VDD ÈLö+e ± j 0D

5. 4. 13 Ê & ˜(© W ò

7 '	ò	‘ &	0 ? l	¨ » l	0 W l	… }
f_{TIMEXT}	Ê & ˜ FG EÃ • &JÏNÁ)·	–	–	f_{TIMER_CLK}/2	25	MHz

>˜ 5-20 Ê & ˜(© W ò

5. 4. 14 FJ (© W ò

5. 4. 14. 1 µG Lö @+eD k4ï ÄI2C Å(© W ò

7 '	ò	7 ö Q ?		FO Q ?		… }
		0 ? l	0 W l	0 ? l	0 W l	
t_{WSCLL}	SCL &JÏ ~+e £ &L$	4.7	–	1.3	–	µs
t_{WSCLH}	SCL &JÏQ +e £ &L$	4.0	–	0.6	–	µs
t_{SUSDA}						

5. 4. 14. 2 **b>| FAî Õ Ä** SPI **Å(© W ò**

7 '	ò	‘ &	0 ? I	0 W I	... }
f_{SCK}	SPI &JÏNÁ)·	k Q ?	–	40	MHz
		þ Q ?	–	12	
$DUTY_{SCK}$	SPI EÃ • &JÏ •0ª"	þ Q ?	30	70	%
t_{SUNSS}	NSS *0û &L$	þ Q ?	10	–	ns
t_{HNSS}	NSS 1 &L$	þ Q ?	10	–	ns
t_{WSCKH} t_{WSCKL}	SCK Q +e £ ¼ ~+e £ &L$	k Q ?	t_{SCK}/2-2	t_{SCK}/2+2	ns
t_{SUMI}					

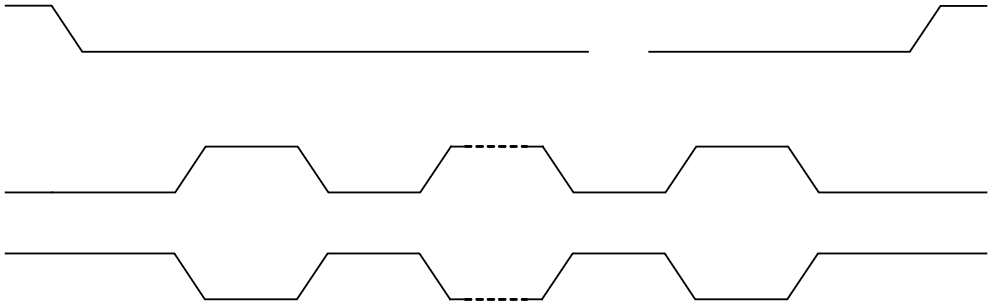

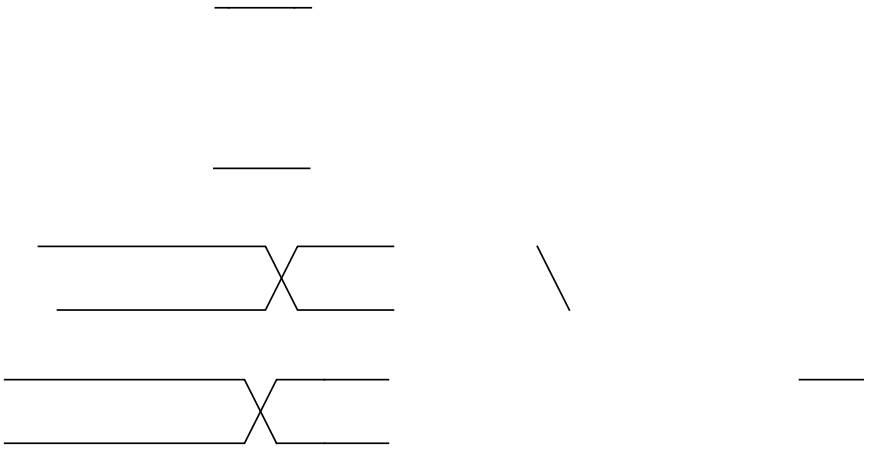

5. 4. 16 Q Eœ ’ ˜(© W ò

7 '	ò	‘ &	0 ? l	¨ » l	0 W l	... }
RES	6EØ)·	–	–	–	12	bit
V_{DD}	Œ+e »93 $	–	2.5	5	5.5	V
V_{REFP}	!“1 ò63+e »	–	2.5	–	V_{DD}	V
V_{REFN}	CO1 ò63+e »	–	0	0	–	V
f_{ADC}	ADC &JÏNÁ)·	VDD=4~5.5V	–	–	40	MHz
		VDD=2.5~5.5V	–	–	20	
$f_{SAMPLING}$	G÷ g)·	VDD=5V	–	–	2.2	MSPS
		VDD=3.3V	–	–	1.1	
f_{TRIG}	FG @ NÁ)·	–	–	–	2.2	MHz
				–	V_{REFP}	V

7 '	ò	‘ &	¨ » I	0 W I	… }
ERR_{OFFSET}	aB3B	f_{ADC}=20MHz ÈR_{AIN}<0.3Kq	±4	–	LSB
ERR_{DNL}	64ï WB	Q FO Q ? ÈT_A=25	±2	–	LSB
ERR_{INL}	0 64ï WB	VREFP=VDD=5V	±4	–	LSB

>˜ 5-26 ADC 2î Ö(© W2

5. 4. 17 ADC µG ò63+e »(© Wò

5. 4. 19 VDD 6 » ˜(© W ò

7 '	ò	‘ &	0 ? l	¨ » l	0 W l	… }
V_{DDSCAL}	EÃ *+e »B	VDD=5.0V ÈEÃ *+e » “ } j 0x00~0x3F ¼0xC0~0xFF	—	±50	—	mv
		VDD=5.0V ÈEÃ *+e » “ } j 0x40~0xBF	—	±25	—	mv
I_{SCAL}	#¸6G+e#q	—	—	55	—	εA

>˜ 5-29 VDD 6 » ˜ (© W ò

7 '	ò	

61 1>õ Ÿ

6. 2 LQFP32 **1>õ j (.**

