32 MCU
ES32H0564

′Y

2025-11-20

© http://www.essemi.com

5. 4. 20 OPA ĭ 54
6 EEPROM 55
6. 1 55
6. 2 55
6. 3 56
6. 4 56
6. 5 ˇ ˆ Standby˜ 57
6. 6 Ũ˙ 57
6. 7 57
6. 8 EEPROM Ω 58
6. 9 EEPROM 59
6. 10 EEPROM 60
6. 10. 1 60
6. 10. 2 60
6. 10. 3 ´ 60
7 62
7. 1 LQFP64 62
8 63

©

© http://www.essemi.com LQTJ F Td P(se

1 :

´Y ES32H0564 ʟ ŭ Â ´Y

´Y ES32H05x4 ĭ ´Y Â

ɢ Cortex-M0 ĭ ê Cortex-M0 ĭ ´Y Ĭ ɪ ARM http://infocenter.arm.com Â

©

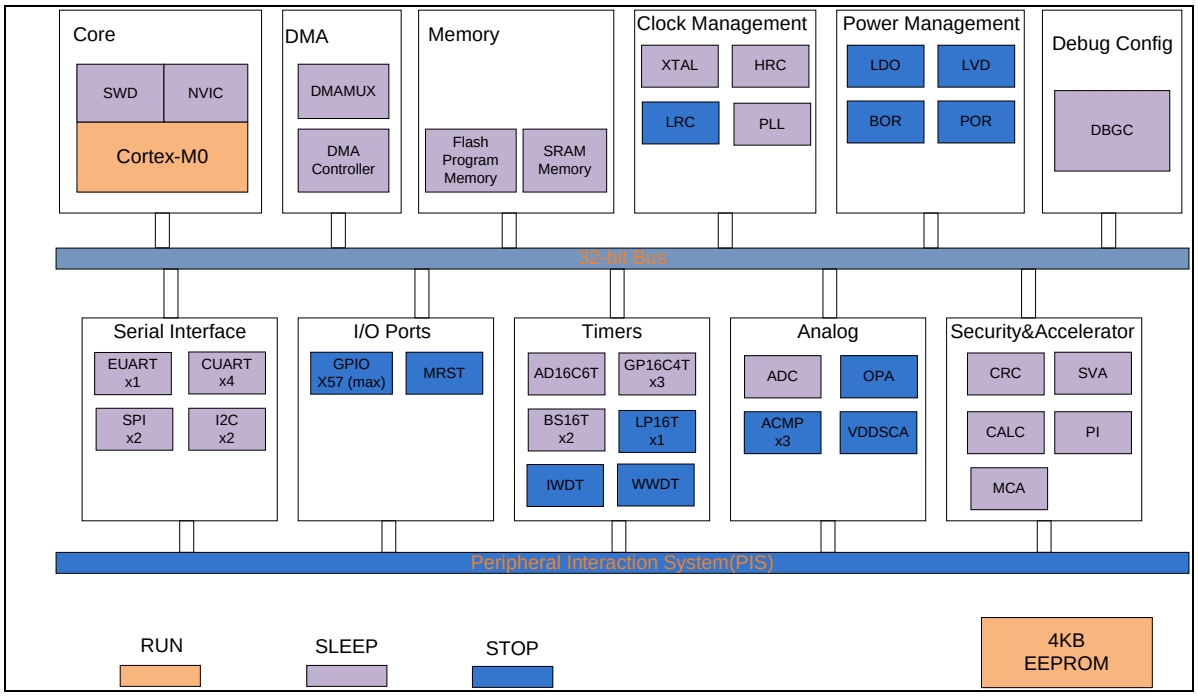

2-1 ES32H0564

©

2. 2

2. 2. 1. 1 ARM Cortex -M0 cor e

ARM Cortex-M0 ˙ ˘ ˝ ˘ Â
˘ ف Â

2. 2. 1. 2 ˆ NVIC˜

ES32H0564 NVIC˙ Nested Vectored Interrupt Controller˜ 4 Â ˛

◇ NVIC ف

◇

◇ ˘ ج ˇ

2. 2. 1. 3 ˆ SysTick ˜

SysTick NVIC ˘ ɢ˚˚ SysTick Â

2. 2. 1. 4 ˆ SWD˜

‰ SWD˙ Serial Wire Debug˜ Â ɢ 24MHz ˘ 5MHz Â

© http://www.essemi.com

2. 2. 2 Ũ

2. 2. 2. 1 ^ FLASH˜

256 KBytes FLASH Ũ G ˘ ECC ^ 64 +8
˜˜ 1 Â

^ FLASH ECC Flash

© http://www.essemi.com

2. 2. 3

2. 2. 3. 1

VDD˙ ˘ VDD IO ŭ ˩ ˫ ˘ 2.2V~5.5V Â

2. 2. 3. 2

◇ ˆ POR˜‘ VDD ɢ VPOR/VPDR ˘ ɢ Â

◇ ˩ ˆ BOR˜‘ ˘ ˩ ˆ BOR˜ ˘
˩ VBOR Â 7 VBOR ˘ ˩ VDD
VBOR ˘ Â

◇ ˩ ˆ LVD˜‘ LVD ɢ VDD ˘ LVDEN LVD˘
VDD ˩ ˇ LVDS ˩ ˘ ºº LVD Â

2. 2. 3. 3 ´

ES32H0564 ´ ´ ˘ ŭ
Â

◇ SLEEP

SLEEP ˘ Â ʜ
Â

◇ STOP

STOP ˘ ˇ ˘ HOSC ˇ HRC
Â ´ IWDT à WWDT à LVD à GPIO à LPTIM à ACMP1
˘ Â ˩ LDO STOP ´ Â

2. 2. 3. 4

ˇ ˘ ŭ ´
Â

◇

ˇ´ ˘ ˇ ˘

Â

◇

HOSM˙ HOSC Security Management˜ HOSC ’˘
˘ ˫ HRC48M 16MHz Â

◇

à ˇ Ũ ˘ ⁞ ´ Â

◇

- 32K à 4~20MHz ˆ LOSC à HOSC˜
- RC ˆ HRC48M˜
- 31.25KHz RC ˆ LRC˜

© http://www.essemi.com

- 48MHz~80MHz PLL

2. 2. 3. 5 DMA

DMA Direct Memory Access

DMA DMA

DMA DMA

DMA DMA

2. 2. 4

2. 2. 4. 1 ˆ GPIO˜

ˆ GPIO˜ PA˜ PB˜ PC ˇ PD ˘ 16
Â ¦ Â ˘ ˛ Ł
˘ ˘ CMOS/TTL ŭ Â
´ ŭ ´ Â ˘ 4 ˘
4 Â ˘ DMA ´ Â

2. 2. 5 ŭ ˚

2. 2. 5. 1 ˚ (CALC)

˚ (CALC) à ŭ ĭ ˚ Â

2. 2. 5. 2 ˚ ˆ SVA˜

SVAˆ Space Vector Acceleratorˇ FOCˇ Field Orientated Controlˇ
ˇ ˚ ´ ˘ ˇ Timer˚˚ PWM Â

- ◇ SVPWM
- ◇ Clarke
- ◇ Park
- ◇ ‘

© http://www.essemi.com

2. 2. 6

ES32H0564 1 à3 4 à1 ˝
˘ 2 Â˝ ‘

				DMA	ADC	/	ε	

◇ ˆ ´ ~ ŭ

◇

◇ ˘ “ Â

2. 2. 6. 2 ˆ GP16C4T˜

ES32H0564 3 ˆ GP16C4T0˝ GP16C4T1˝ GP16C4T2˜˜

◇ 16 à ⁞ à / ⁞ ₶

◇ 16 ˘ ɢ ˘ : ɢ 1~65536

◇ 4 ˘ ɢ‘

–

–

– PWM ˆ ˇ ~

– ‖

◇ ε

◇ ˘ ɢ.

◇ Hʊ /DMA ‘

– ‘ / à ˆ / ~

– Hʊ ‘ ₶ à à /

–

–

◇ ˆ ´ ~ ˇ

◇

◇ ˘ “ Â

2. 2. 6. 3 ˝ ˆ LP16T˜

1 ˝ ˆ LP16T˜ Â ˝ ˆ SLEEP˝ STOP˜ ˘

˘ ˝ ˘ 16 ˘ ŭ PWM ˘ ‖

© http://www.essemi.com

2. 2. 7

2. 2. 7. 1 ^ I2C˜

2 I2C˚ I2C0 à I2C1˜ Â I2C˚ Inter-Intergrated Circuit˜ ˇ
I2C Â ˝ ˘ I2C à
à ˇ Â ‰ ˇ Â SMBus2.0 Â ɢ ˘
CRC ˇ à SMBus˚ ˜ ŭ PMBus˚ ˜ Â

I2C DMA ˇ Â

2. 2. 7. 2 ^ SPI˜

2 SPI ^ SPI0 à SPI1˜ Â SPI˙ Serial Peripheral Interface˜
ťˆ / ťˆ Â ˘ , ˘ ɪ
ʟ ^ SCK˜ Â Â ɢ ˘
ɢ ťˆ ˘ ťˆ ˘ CRC
Â

SPI DMA ˇ Â

2. 2. 7. 3 (UART)

5 UART ^ UART0~4˝ UART0 ﻧﺠﻰ EUART˜ UART1~4 ﻧﺠﻰ
CUART˜ Â ^ UART˜ ʟ ˘ MCU
‰ NRZ ťˆ ÂUART
˘ ʟ Â

UART ˇ ťˆ ˘ LIN ε ˜ à à
IrDA˚ ˜ SIR ENDEC ˇ modem ^ CTS/RTS˜˜
Â

DMA ‖ ˘ ɪ Â

UART /	UART0 ^ ﻧﺠﻰ˜	UART1/2/3/4 ^ ﻧﺠﻰ˜

© http://www.essemi.com

2. 2. 8

2. 2. 8. 1 ˆ ADC˜

1 ˆ ADC˜ Â ADC˜ Analog to Digital Convertor˜ 12
Â 28 ˘ ɛ 26
à 2 ˆ 1 VREF 1.2V ˘ 1 OPA ˧˜ Â
à à Â ADC Ũ
16 Â

ADC ˘ ˧
Â

ADC ‰ DMA ˊ Â

2. 2. 8. 2 ˧ ˆ VDDSCALAR˜

1 256 ˧ ˆ VDDSCALAR˜˜ ˧ ɢ ǐ ˧ Â

2. 2. 8. 3 ˆ ACMP˜

3 ˆ ACMP0˜ ACMP1˜ ACMP2˜ Â ACMP˜ Analog Comparator˜
ɢ ˧ Â ɢ 1˜
0 Â ˘ ° Â

ACMP ف ˘ ˧ ˘ ˊ Â

ACMP1 STOP ˘ STOP Â

2. 2. 8. 4 ˆ OPA˜

1 ˆ OPA˜˜ ˘ ˘
à à Â

© http://www.essemi.com

3

3. 1

3. 1. 1 LQFP64 52

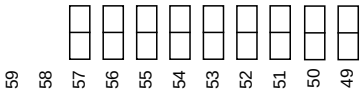

© http://www.essemi.com

3. 2 ’

3. 2. 1 ES32H0564LTE ’

PIN NO.	PIN NAME ^ FUNC1˜	FUNC2	FUNC3	FUNC4	FUNC5	FUNC6	FUNC7	FUNC0 ^ Default˜
	PD3	CUART1_CTS	CUART2_TX	GP16C4T1_CH1	AD16C6T_CH1	PIS_CH3	AD16C6T_BKOUT1	/
	PC13	CUART3_RX	GP16C4T0_CH4	SPI1_SCK	AD16C6T_CH4N	PIS_CH5	LSCO	/
	PC14	CUART0_RX	CUART1_RX	SPI1_MISO	AD16C6T_CH1	PIS_CH6	ACMPO0	AIN21
	PC15	CUART0_TX	CUART1_TX	SPI1_MOSI	AD16C6T_CH2	PIS_CH7	ACMPO1	AIN26
	PD0	I2C1_SCL	CUART2_RX	BUZ	AD16C6T_CH3	PIS_CH0	GP16C4T2_CH2	AIN24
	PD1	I2C1_SDA	CUART2_TX	GP16C4T2_CH3	AD16C6T_CH4	PIS_CH1	AD16C6T_BKIN1	AIN10
	NC	/	/	/	/	/	/	/
	PC0	CUART1_TX	SPI0_NSS	I2C1_SDA	AD16C6T_CH4	PIS_CH0	ACMPO2	AIN20/OPAO
	PC1	CUART1_RX	SPI0_SCK	I2C1_SCL	AD16C6T_CH1	PIS_CH1	LP16T_ETR	AIN7/C1P3/C1N1/OPREFN
	PC2	CUART2_TX	SPI0_MISO	GP16C4T2_CH1	AD16C6T_CH2	PIS_CH2	LP16T_OUT	AIN6/C0P3/OPN2
	PC3	CUART2_RX	SPI0_MOSI	GP16C4T2_CH2	AD16C6T_CH3	PIS_CH3	/	AIN5/C2P2/OPN1
	PD4	HSCO	CUART1_RX	GP16C4T1_CH2	AD16C6T_CH2	PIS_CH4	AD16C6T_BKOUT2	/
	PD5	LSCO	CUART1_TX	GP16C4T1_CH3	AD16C6T_CH3	PIS_CH5	LP16T_OUT	/
	PA0	CUART2_TX	GP16C4T0_CH1	GP16C4T0_ETR	AD16C6T_CH1	PIS_CH0	LP16T_ETR	AIN4/C1P2/OPP3
	PA1	CUART2_RX	GP16C4T0_CH2	SPI0_SCK	AD16C6T_CH2	PIS_CH1	LP16T_OUT	AIN3/C0P2
	PA2	CUART1_TX	GP16C4T0_CH3	SPI0_MISO	AD16C6T_CH3	PIS_CH2	CUART0_TX	AIN2/C2P0/OPP2
	PA3	CUART1_RX	GP16C4T0_CH4	SPI0_MOSI	AD16C6T_CH4	PIS_CH3	CUART0_RX	AIN1/C1P0/OPP1
	PA4	SPI0_NSS	CUART2_TX	GP16C4T1_CH3	AD16C6T_CH1N	PIS_CH4	AD16C6T_BKIN2	AIN0/C0P0/OPP0
	PB10	I2C1_SCL	CUART2_TX	GP16C4T0_CH3	AD16C6T_CH4	PIS_CH2	AD16C6T_BKOUT1	AIN19
	PA5	SPI0_SCK	CUART2_RX	GP16C4T1_CH4	AD16C6T_CH2N	PIS_CH5	I2C1_SCL	AIN13/CXN0/AREFP/C0P1
	PA6	SPI0_MISO	CUART3_TX	GP16C4T1_CH1	AD16C6T_CH1	PIS_CH6	I2C1_SDA	AIN14/AREFN/C1P1

© http://www.essemi.com

	PC4	CUART3_RX	I2C0_SCL	GP16C4T2_CH3	AD16C6T_CH3N	PIS_CH4	AD16C6T_BKIN2	AIN8
	PA7	SPI0_MOSI	CUART3_RX	GP16C4T1_CH2	AD16C6T_CH1N	PIS_CH7	I2C1_SMBA	AIN15/OPN0C2P1
	PC5	CUART3_TX	I2C0_SDA	GP16C4T1_ETR	AD16C6T_CH4N	PIS_CH5	AD16C6T_CH6	AIN9
	PD8/MRST	HSCO	CUART3_RX	GP16C4T0_CH2	AD16C6T_CH3N	PIS_CH0	CUART2_RTS	/
	PB0	GP16C4T1_CH3	CUART0_RX	I2C0_SCL	AD16C6T_CH2N	PIS_CH0	GP16C4T2_ETR	/
	PB1	GP16C4T1_CH4	CUART0_TX	I2C0_SDA	AD16C6T_CH3N	PIS_CH1	EUART0_RX	/
	PB2/OSCI	GP16C4T0_CH1	EUART0_RX	CUART3_TX	AD16C6T_CH1N	PIS_CH2	EUART0_TX	AIN27/OSCI
	PB11/OSCO	I2C1_SDA	CUART2_RX	GP16C4T0_CH4	AD16C6T_CH4N	PIS_CH3	I2C1_SMBA	AIN22H4

© http://www.essemi.com

3. 3 ´

	A/D	
PA0~PA15	D	I/O
PB0~PB15	D	I/O
PC0~PC15	D	I/O
PD0~PD11	D	I/O
SWCLK	D	/
SWDIO	D	/
MRST	D	˘
SPIx_SCK	D	SPI
SPIx_NSS	D	SPI
SPIx_MISO	D	SPI / ı
SPIx_MOSI	D	SPI / ı
I2Cx_SCL	D	I2C /
I2Cx_SDA	D	I2C /
I2Cx_SMBA	D	SMBA
EUART0_TX	D	EUART
EUART0_RX	D	EUART
EUART0_RTS	D	EUART RTS
EUART0_CTS	D	EUART CTS
EUART0_CK	D	EUART
CUARTx_TX	D	CUART
CUARTx_RX	D	CUART

© http://www.essemi.com

	A/D	
AREFN	A	ADC ĭ J
AIN0~AIN15˜ AIN17˜ AIN19~AIN27	A	ADC 0~17,19~27
OPNx	A	OPA x
OPPx	A	OPA x
OPAO	A	OPA
OPREFN	A	OPA ĭ J
CyPx	A	ACMPy x
CyN1	A	ACMPy 1
CXN0	A	ACMP0~ACMP2 0
ACMPOx	D	ACMP0~ACMP2
OSCI	A	
OSCO	A	
VDD	P	
VSS	P	

© http://www.essemi.com

4 Ũ

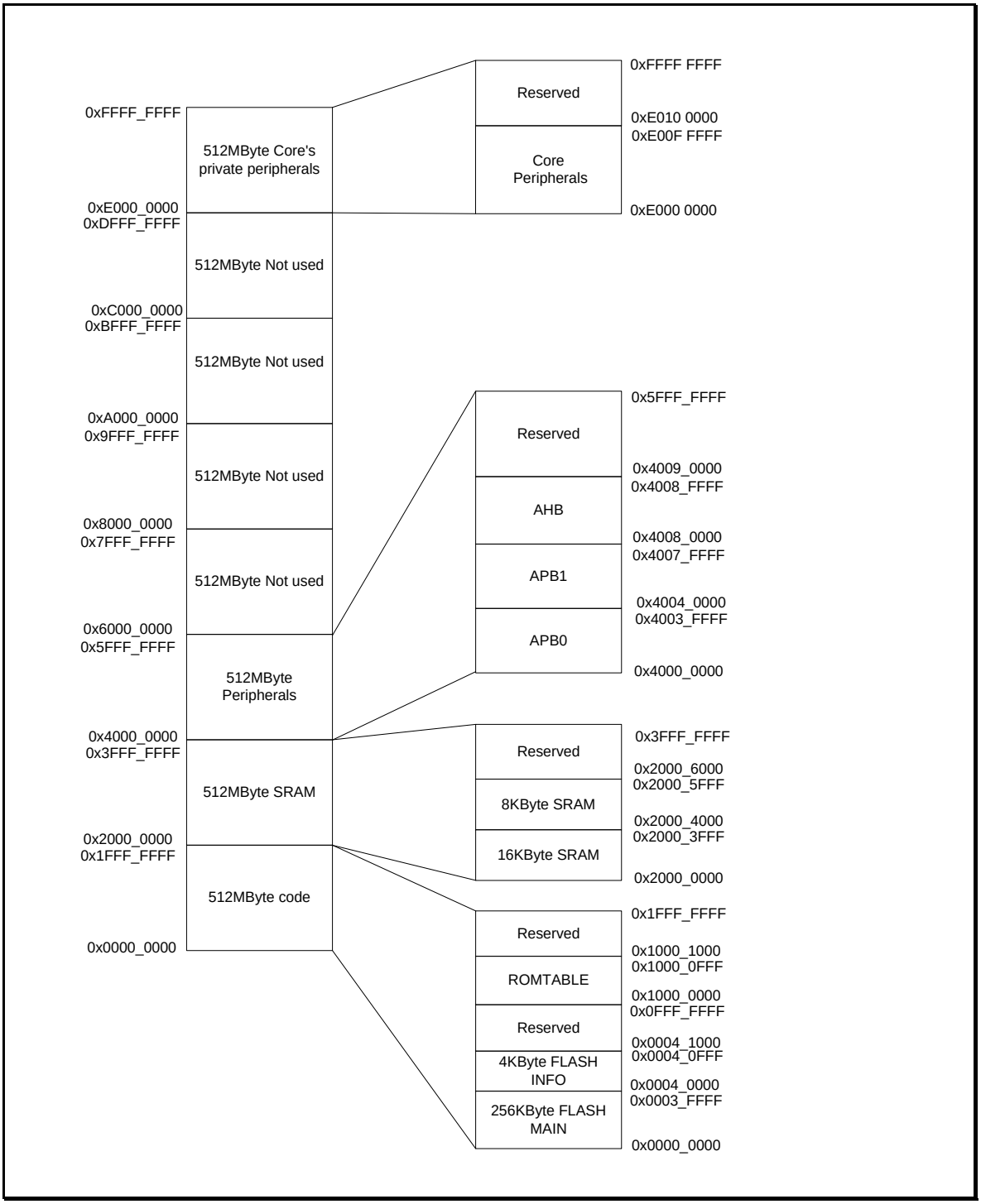

4-1 Ũ

© http://www.essemi.com

5

5. 1

©

5. 3 ï

ï ˘ Â

5. 3. 1 ⅃ ï

	ï				
VDD		–	-0.3	6.25	V
VIN	⅃	–	-0.3	VDD+0.3	V

5-1 ⅃ ï

5. 3. 2 ï

	ï				
I_{VDD}	VDD	–	–	100	mA
I_{VSS}	VSS	–	–	100	mA
I_{IO}	ˆ ~	VDD=5V	–	50	mA
	ˆ ~	VDD=5V	–	50	mA

5-2 ï

5. 3. 3 ï

	ï				
T_{STG}	Ũ	–	-55	150	
T_J		–	–	150	

5-3 ï

© http://www.essemi.com

5. 4

5. 4. 1

f_{HCLK}	AHB ^ Flash ECC´ ~	–	–	72	MHz
	AHB ^ Flash ECC´ ~	–	–	80	

© http://www.essemi.com

	΅			΂		
		LVDS=110	3.85	4.0	4.25	
		LVDS=111	4.45	4.6	4.85	
$V_{LVDHYST}$	V_{LVD} ┘	–	–	90	–	mV
I_{LVD}	LVD	25 ˇ VDD = 5V	–	0.3	–	uA

5-6 ˇ ΅

5. 4. 4

©

5. 4. 6 ÏÎ

HRC ˆ 48MHz˜

	ÏÎ			¤Ç		
f_{HRC}		–	–	48	–	MHz
Duty		–	49	50	51	%
ACC_{HRC48M}	HRC 48MHz	T_A=25°C	-0.6	–	0.6	%
		T_A=-20 to 85°C	-1.0	–	1.0	%
		T_A=-20 to 105°C	-1.5	–	1.5	%
		T_A=-40 to 105°C	-2.0	–	2.0	%
t_{START_HRC}		–	–	30	–	us
I_{HRC}	HRC	–	–	480	–	uA

5-11 HRC

LRC ˆ 31.25KHz˜

	ÏÎ			¤Ç		
f_{LRC}		–	–	31.25	–	KHz
ACC_{LRC}	LRC	T_A=25°C	-5.0	–	5.0	%
		T_A=-40 to 105 °C	-10.0	–	10.0	%
t_{START_LRC}		–	–	300	–	us
I_{LRC}	LRC	–	–	0.2	–	uA

5-12 LRC

‘ HRC ˇ LRC ÏÎ ˘ G ˇ ˘
°° Â

©

5. 4. 7 ĭ

	ĭ					
f_{PLL_IN}	PLL	T_A=-40 to 105°C	3.6	4	4.4	MHz
	PLL	T_A=-40 to 105°C	45	50	55	%
f_{PLL_OUT}	PLL	T_A=-40 to 105°C	48	–	80	MHz
t_{LOCK}	PLL	T_A=25	–	80	300	us
I_{PLL}	PLL	T_A=25 ˘ VDD=5V	–	300	–	uA

5-13 PLL ĭ

5. 4. 8 Ŭ ĭ

	ĭ					
t_{PROG}		T_A=-40 to 105°C	–	25	–	us

© http://www.essemi.com

5. 4. 9

5. 4. 9. 1

© http://www.essemi.com

5. 4. 11 I/O

	ΆΈ			ΜΒ		
V_{IL}	I/O ΛΛ CMOS˜	T_A=-40 to 105°C 2.2V ≤ VDD ≤ 5.5V	–	–	0.2*VDD	V
	I/O ΛΛ TTL˜	T_A=-40 to 105°C 2.2V ≤ VDD ≤ 5.5V	–	–	0.15*VDD	V
V_{IH}	I/O ΛΛ CMOS˜	T_A=-40 to 105°C 2.2V ≤ VDD ≤ 5.5V	0.8*VDD	–	–	V
	I/O ΛΛ TTL					

©

| | | |

5. 4. 11. 2 I/O

I/O

◇ I_{OL} vs V_{OL} @VDD=2.5V

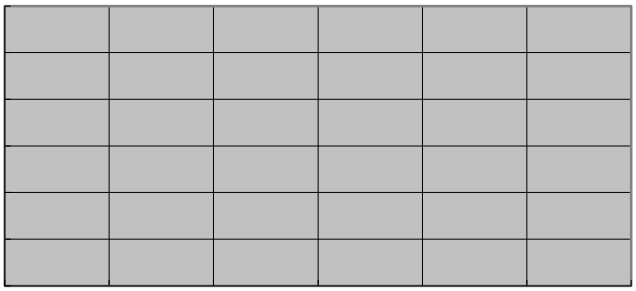

◇ I_{OH} vs V_{OH} @VDD=2.5V PC0~PC15

◇ I_{OH} vs V_{OH} @VDD=2.5V PC0~PC15

© http://www.essemi.com

◇ I_{OL} vs V_{OL} @VDD=5.0V˜ ˛ ˜

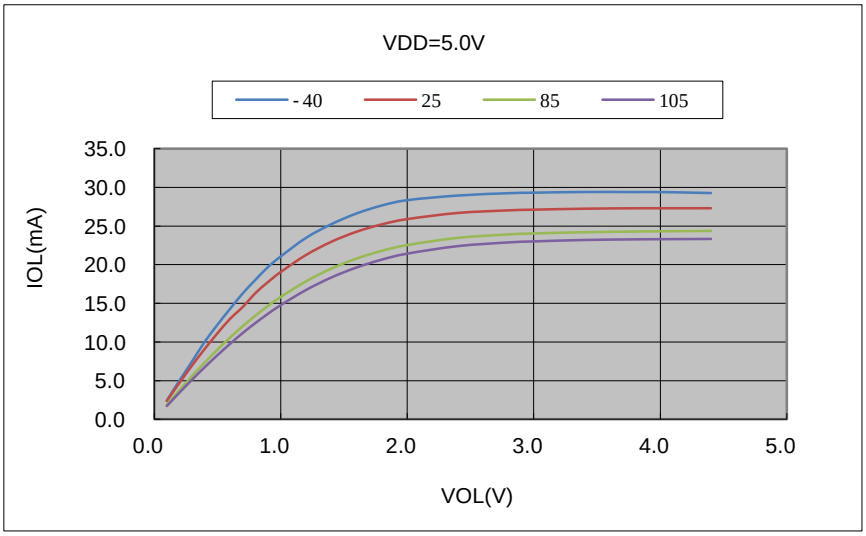

◇ I_{OH} vs V_{OH} @VDD=5.0V˜ ˛ ˘ PC0~PC15 ˜

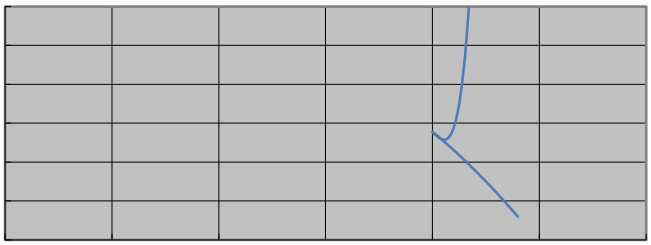

◇ I_{OH} vs V_{OH} @VDD=5.0V˜ ˛ ˘ PC0~PC15˜

© http://www.essemi.com

◇ I_{OL} vs V_{OL} @VDD=3.5V

◇ I_{OH} vs V_{OH} @VDD=3.5V

©

◇ I_{OL} vs V_{OL} @VI =5.0V

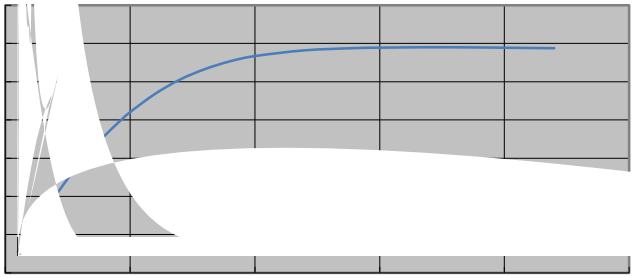

◇ I_{OH} vs V_{OH} @VDD=5.0V PC0~PC15

◇ I_{OH} vs V_{OH} @VDD=5.0V PC0~PC15

©

◇ I_{OL} vs V_{OL}@VDD=5.5V˙ ˛ ˜

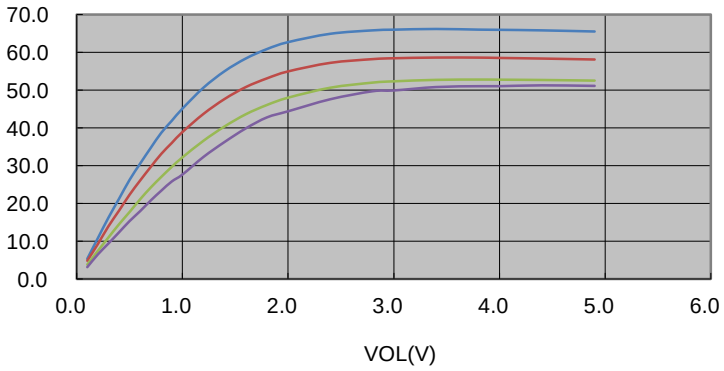

◇ I_{OH} vs V_{OH} @VDD=5.5V˙ ˛ ˇ PC0~PC15 ˜

◇ I_{OH} vs V_{OH} @VDD=5.5V˙ ˛ ˇ PC0~PC15˜

©

© http://www.essemi.com

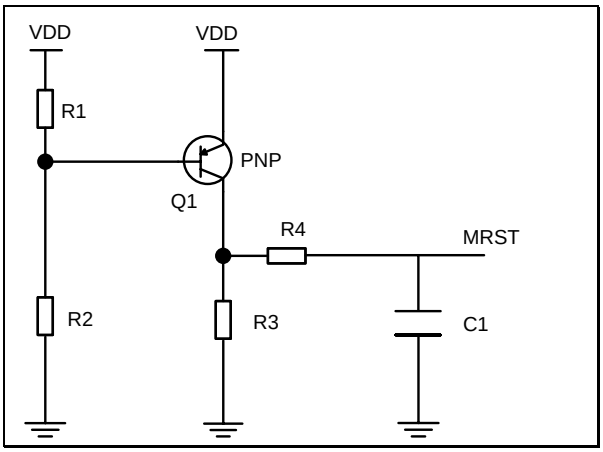

5-7 MRST 3

‘ PNP ˘ R1ˆ ~ ˇ R2ˆ ~ ˩ ˘ VDDˇ R3ˆ ~ ˘ R4ˆ ~ ˇ C1ˆ ~ ˘ C1 MRST Â

©

5. 4. 13 أّ

	أّ			نجى		

© http://www.essemi.com

5. 4. 14. 2 ^ SPI˜ ĭ

	ĭ				
f_{SCK}	SPI		–	40	MHz
		ŀ	–	12	
$DUTY_{SCK}$	SPI	ŀ	30	70	%
t_{SUNSS}	NSS	ŀ	10	–	ns
t_{HNSS}	NSS	ŀ	10	–	ns
t_{WSCKH} t_{WSCKL}	SCK ˇ		t_{SCK}/2-2	t_{SCK}/2+2	ns
t_{SUMI}			10	–	ns
t_{SUSI}		ŀ	5	–	ns
t_{HMI}			5	–	ns
t_{HSI}		ŀ	5	–	ns
t_{ASO}		ŀ	0	$3t_{PCLK}$	ns
t_{DISSO}		ŀ	0	10	ns
t_{VSO}		ŀ	–	8	ns
t_{VMO}			–	8	ns
t_{HSO}		ŀ	1	–	ns
t_{HMO}			1	–	ns

5-22 SPI ĭ

‘ ĭ ˘ SPI 30pF˜ SPI ˇ
„ ˘ „ Â SPI ˘ SPI ˇ
GPIO_ODRV ODRVy<1:0>=01 Â

© http://www.essemi.com

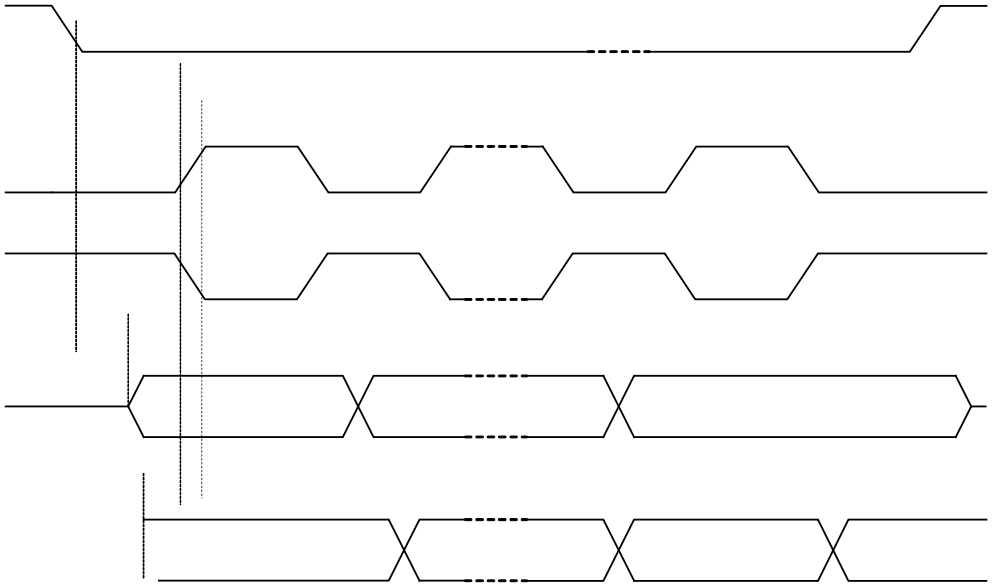

© http://www.essemi.com

5. 4. 16 ΅΄

	΅΄	

©

	ï		¡		
ERR_{OFFSET}		f_{ADC}=20MHz˙ R_{AIN}<0.3K	±4	–	LSB
ERR_{DNL}		˘ T_A=25	±2	–	LSB
ERR_{INL}		VREFP=VDD=5V	±4	–	LSB

5-26 ADC 2

5. 4. 17 ADC ï J ï

	ï			¡		
V_{REFINT}	ADC ï J	T_A=25 ˘ VDD=5.0V	1.185	1.20	1.215	V
$t_{SVREFINT}$	ADC ï J	ADC 5MHz˙ 16Tadclk	3	·	·	uS

5-27 ADC ï J ï

1' ADC ï J V_{REFINT} ˆ -40 105 ˜ G ±1% Â
2' ADC ï J V_{REFINT} 18 ˘ ADC 5MHz˙ G
3us Â

5. 4. 18 ï

	ï			¡		
V_{DD}	J	–	3.5	5	5.5	V
V_{IN}	J	–	0	–	V_{DD}	V
I_{ACMP}	¬	˘ VDD=5.0V	–	4	–	uA
		˘ VDD=5.0V	–	140	–	
V_{OFFSET}	J	˘ VDD=5.0V	–	±5	±15	mV
		˘ VDD=5.0V		±10	±30	
t_{START}		˘ VDD=5.0V	–	7	12	uS
		˘ VDD=5.0V	–	0.6	1.5	
		˘ VDD=5.0V J 0.1V	–	8	14	
t_{DELAY}	ف					uS

©

6. 3

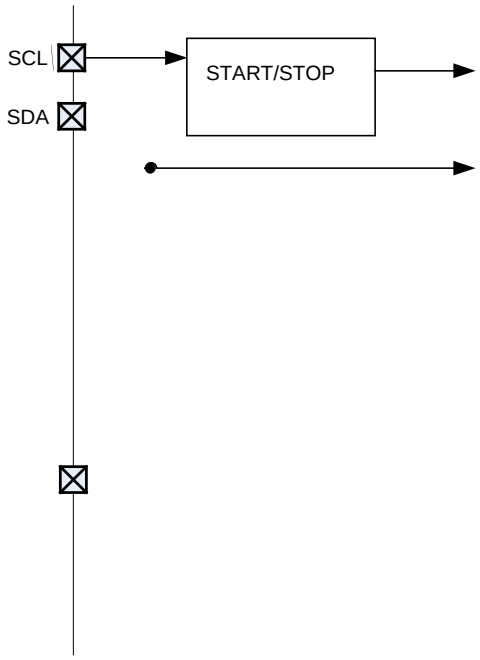

© http://www.essemi.com

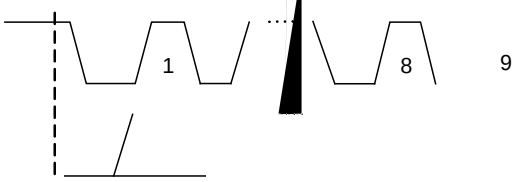
1
8
9

©

ˆ bit7~0˜ 12 ˆ A11~A0˜˜ EEPROM 4K
Ű Â

ˆ DEVICE ADDRESS˜ ˇ ˆ BYTE ADDRESS˜ ‘

	Bit7	Bit6	Bit5	Bit4	Bit3	Bit2	Bit1	Bit0

Ω ـّ ـً ـٍ ف ـً ـّ Â

© http://www.essemi.com

ACK˘ EEPROM ACK˘ ˛
˘ EEPROM Ũ˙ ˘ ˛

C0Tj /C2_0 1 Tf -0.011 Tc 0.011 Tw 1.56570 Td [<02C81-11<0A4FDA1AF-

©

ĭ		2.2V ≤ V

© http://www.essemi.com

8

V1.0	2025-11-20	

© http://www.essemi.com